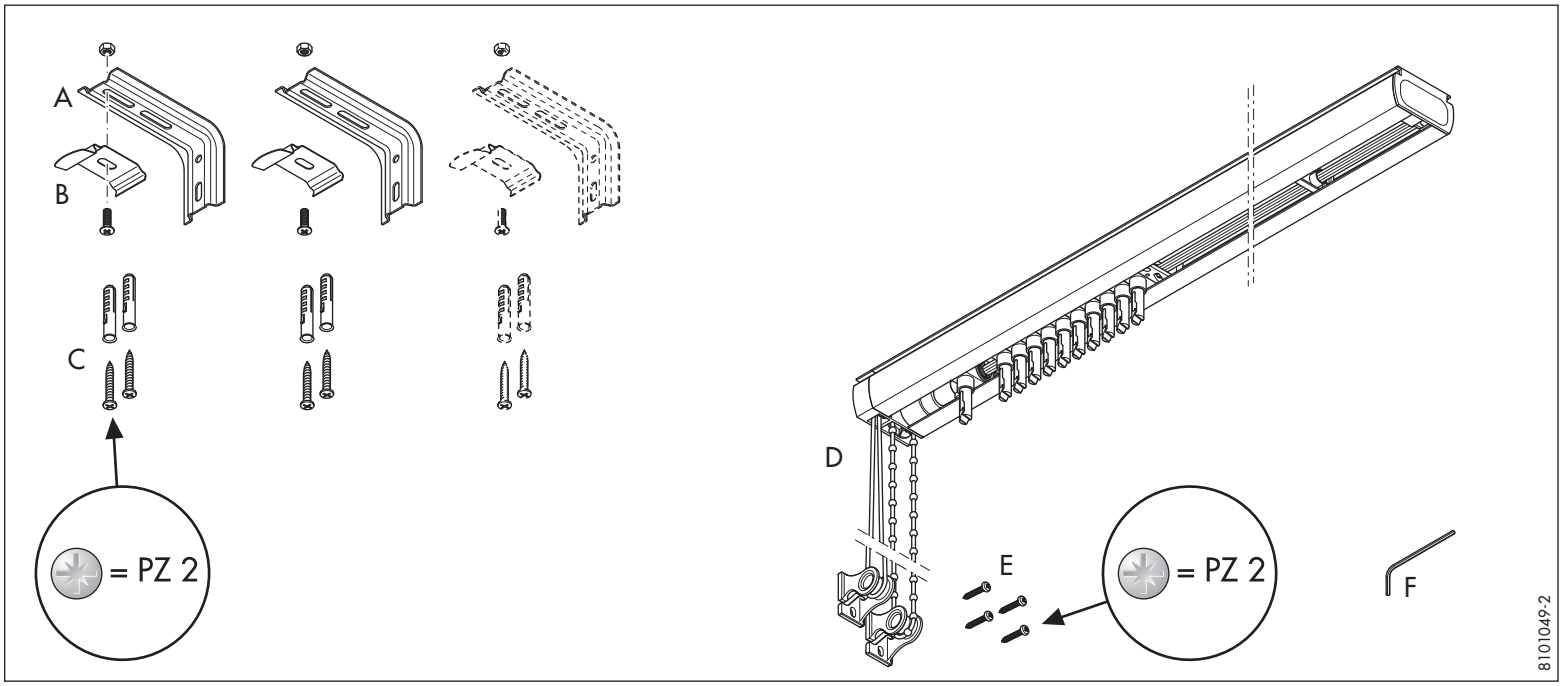
A
B
C
= PZ 2
D
E
= PZ 2
F
8101049-2

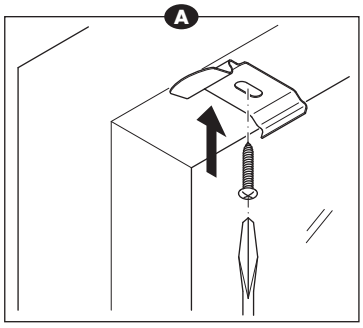
A

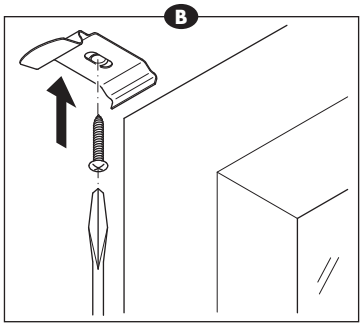
B

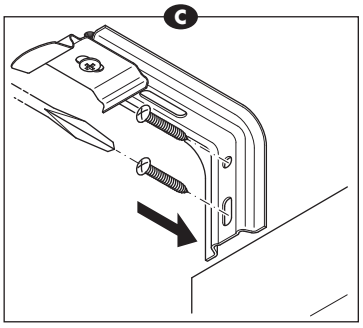
C

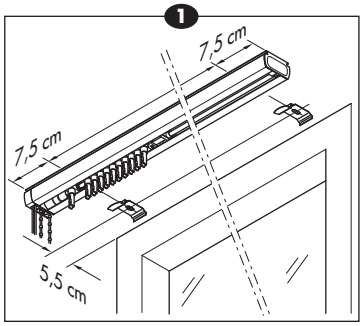
1
7,5 cm
7,5 cm
5,5 cm

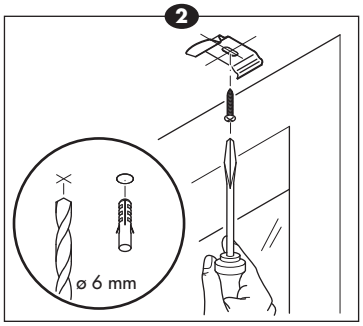
2
ø 6 mm

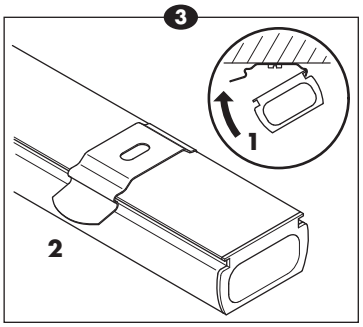
3
1
2

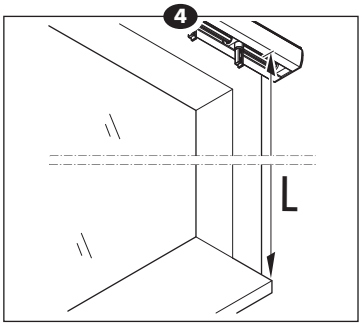
4
L

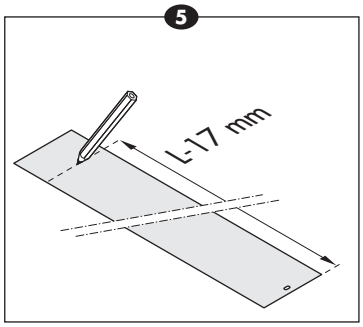
5
L-17 mm

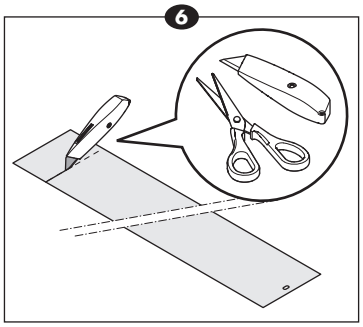
6

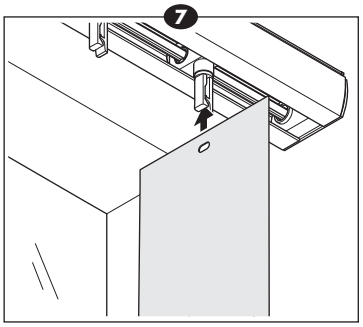
7

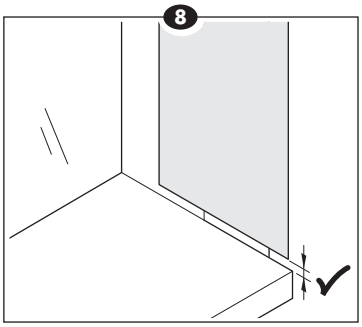
8

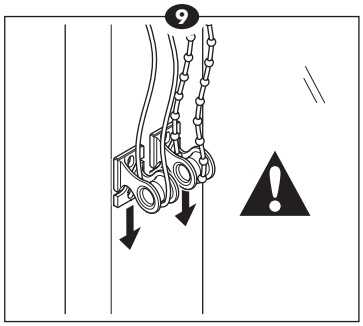
9

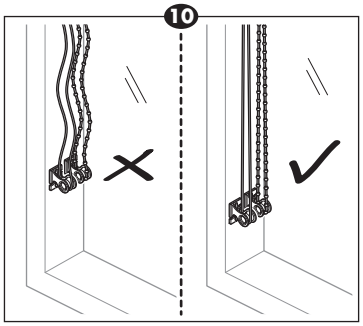
10

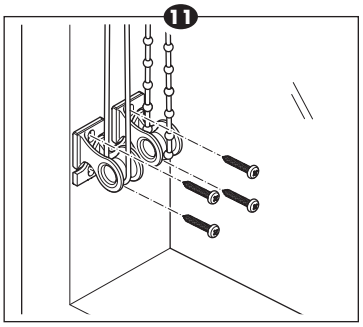
11

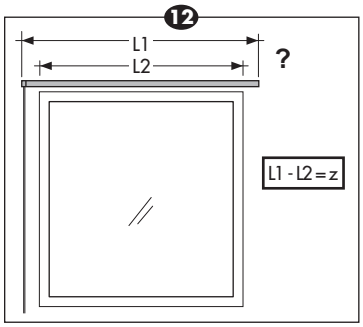

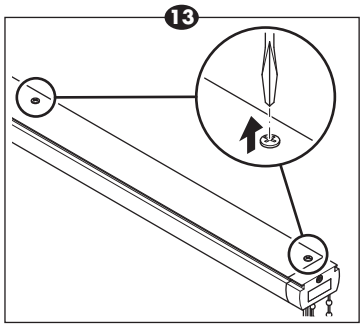

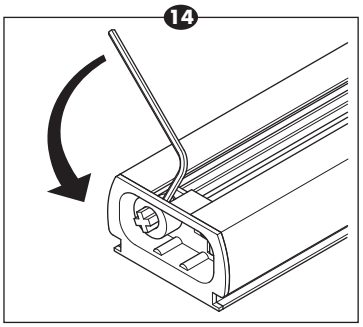

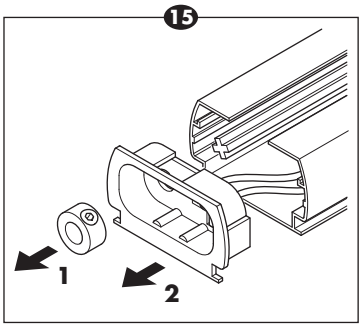

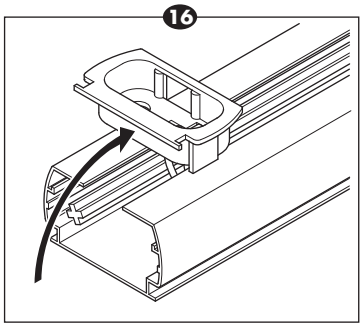

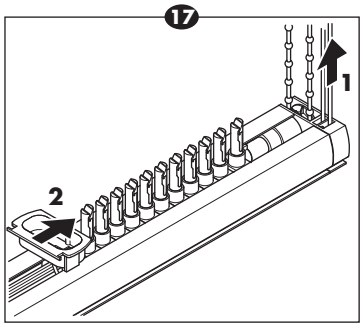

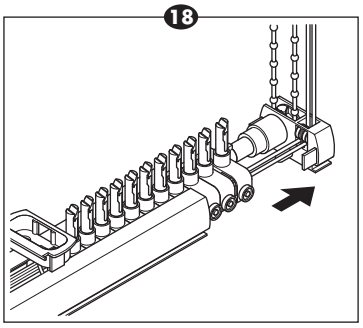

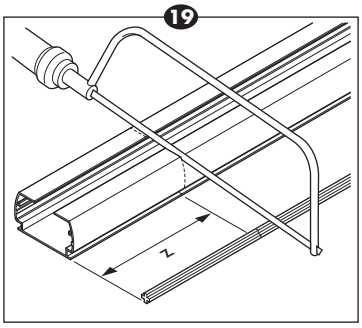

z	
0-8 cm	→ 27
> 8 cm	→ 20

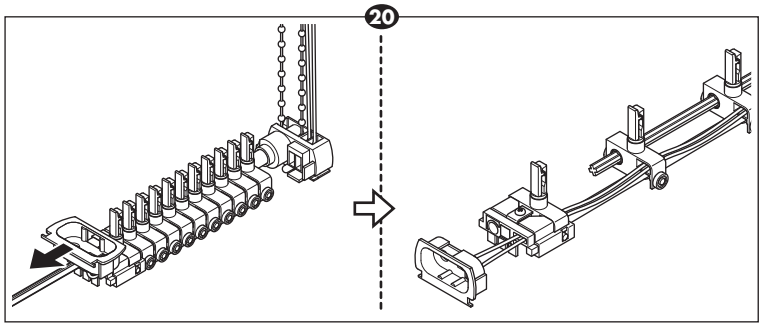

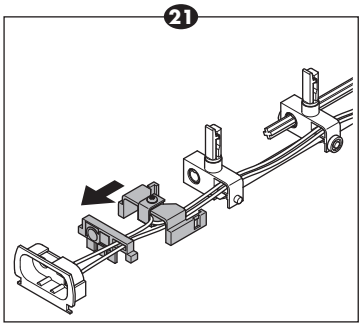

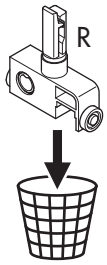
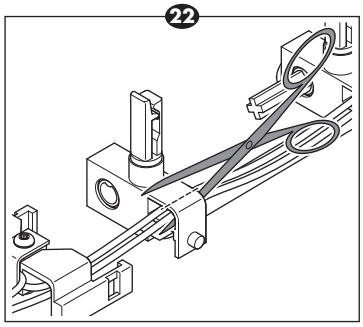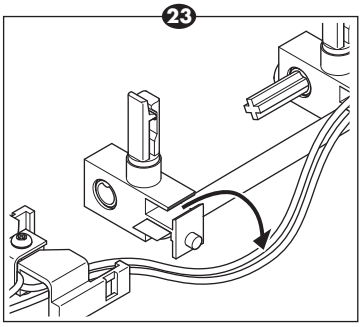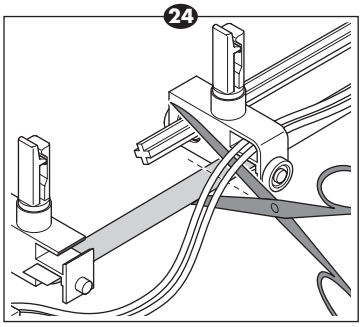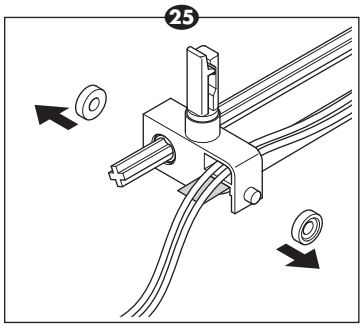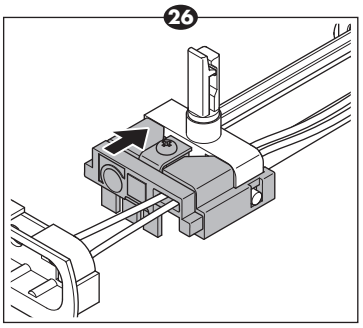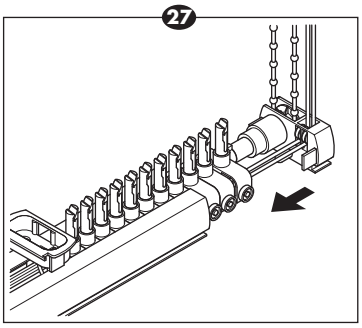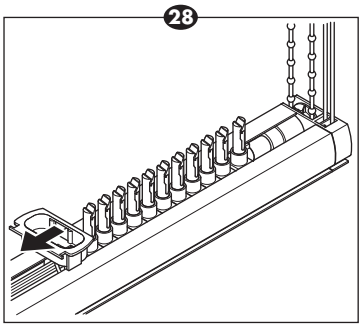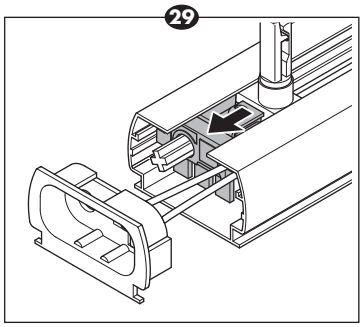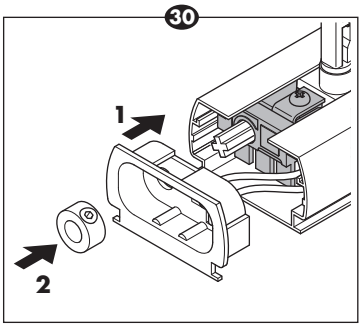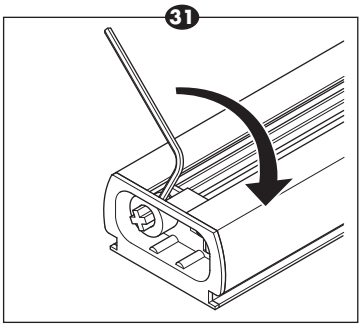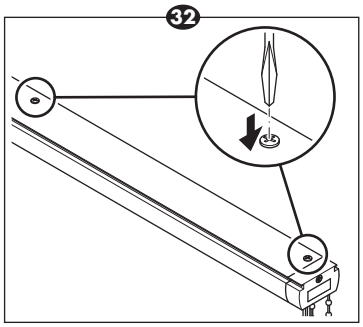
z	R
8-16 cm	1x
16-24 cm	2x
24-32 cm	3x
32-40 cm	4x
40-48 cm	5x
48-56 cm	6x