9

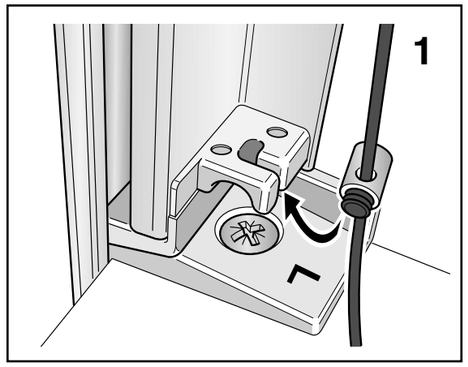

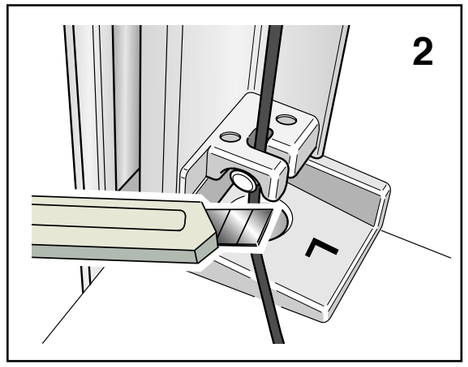

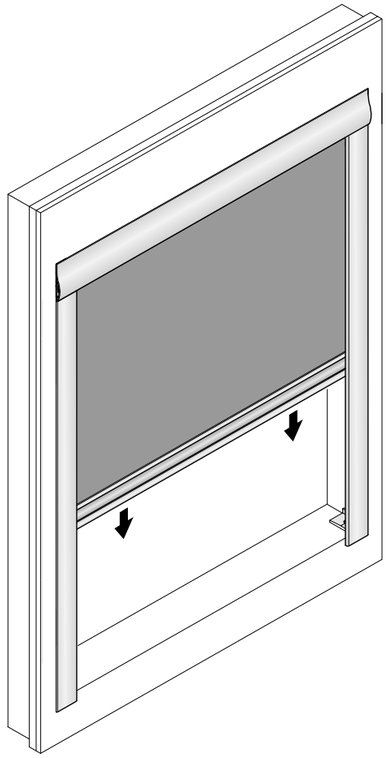

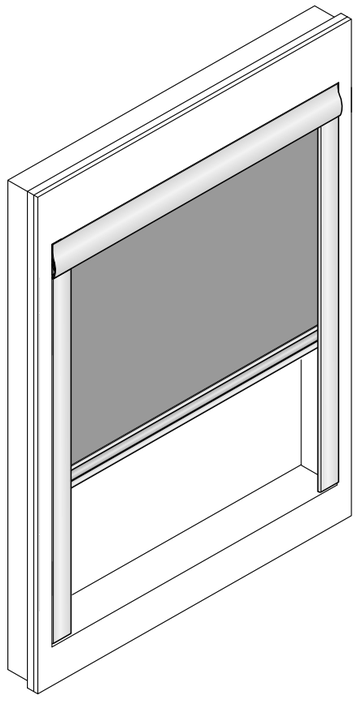

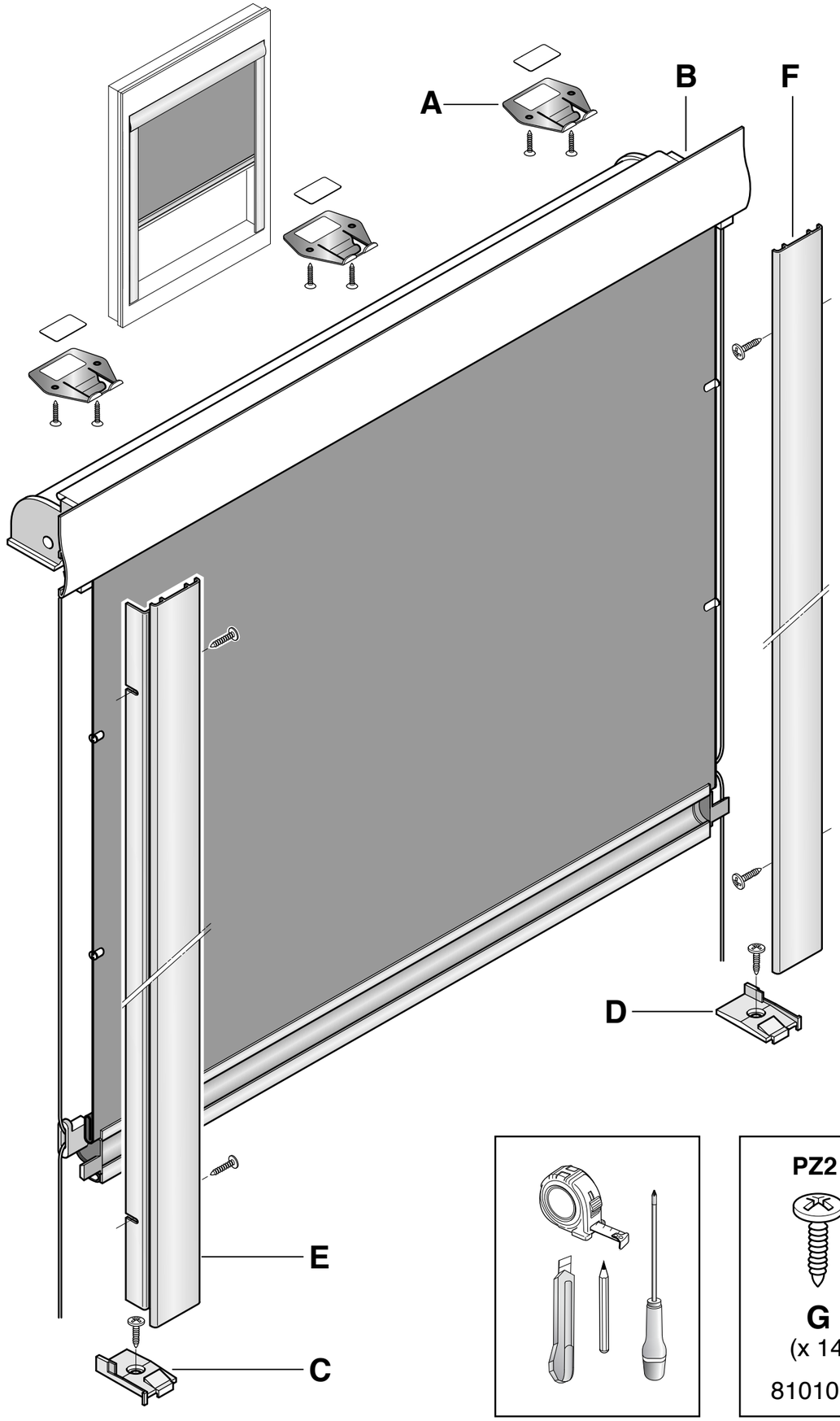

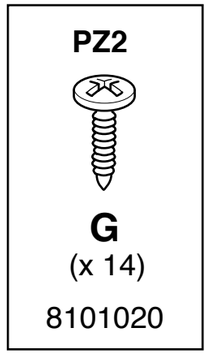

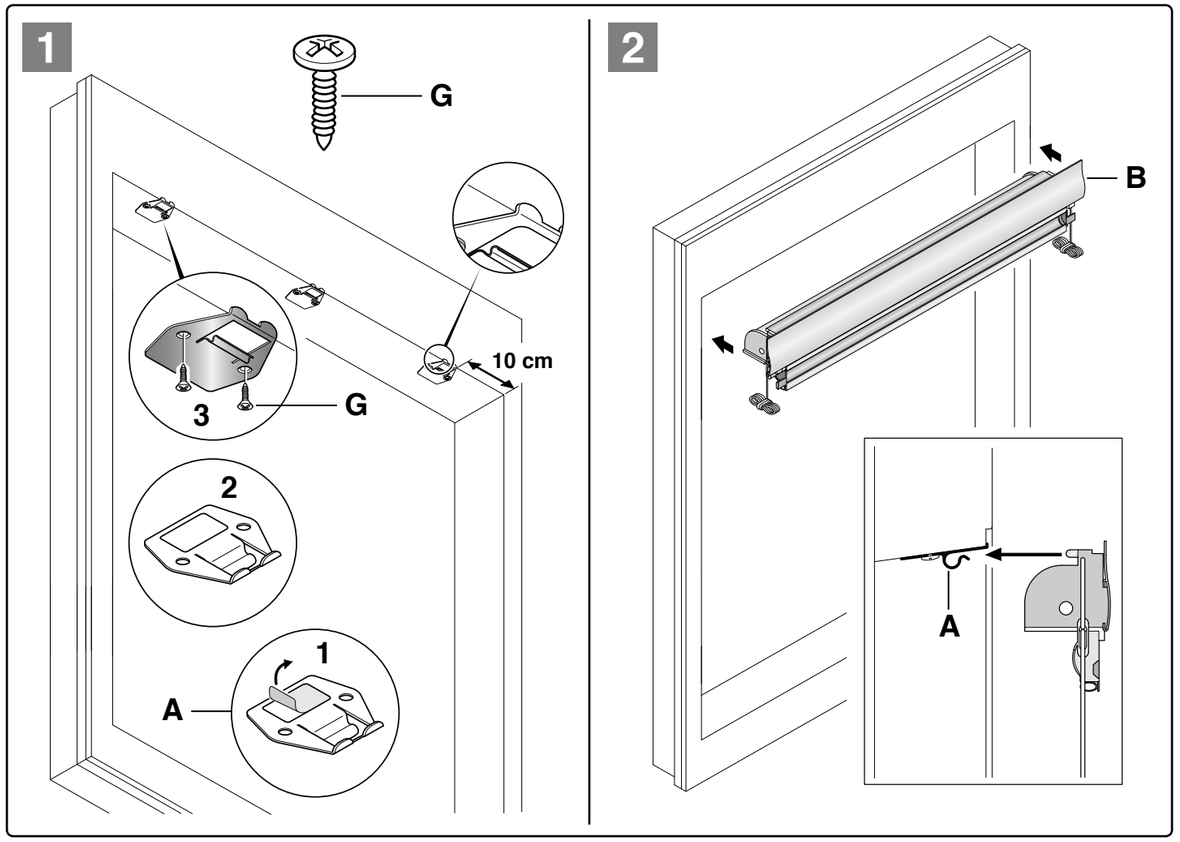
1
G
10 cm
3
G
2
1
A
2
B
A

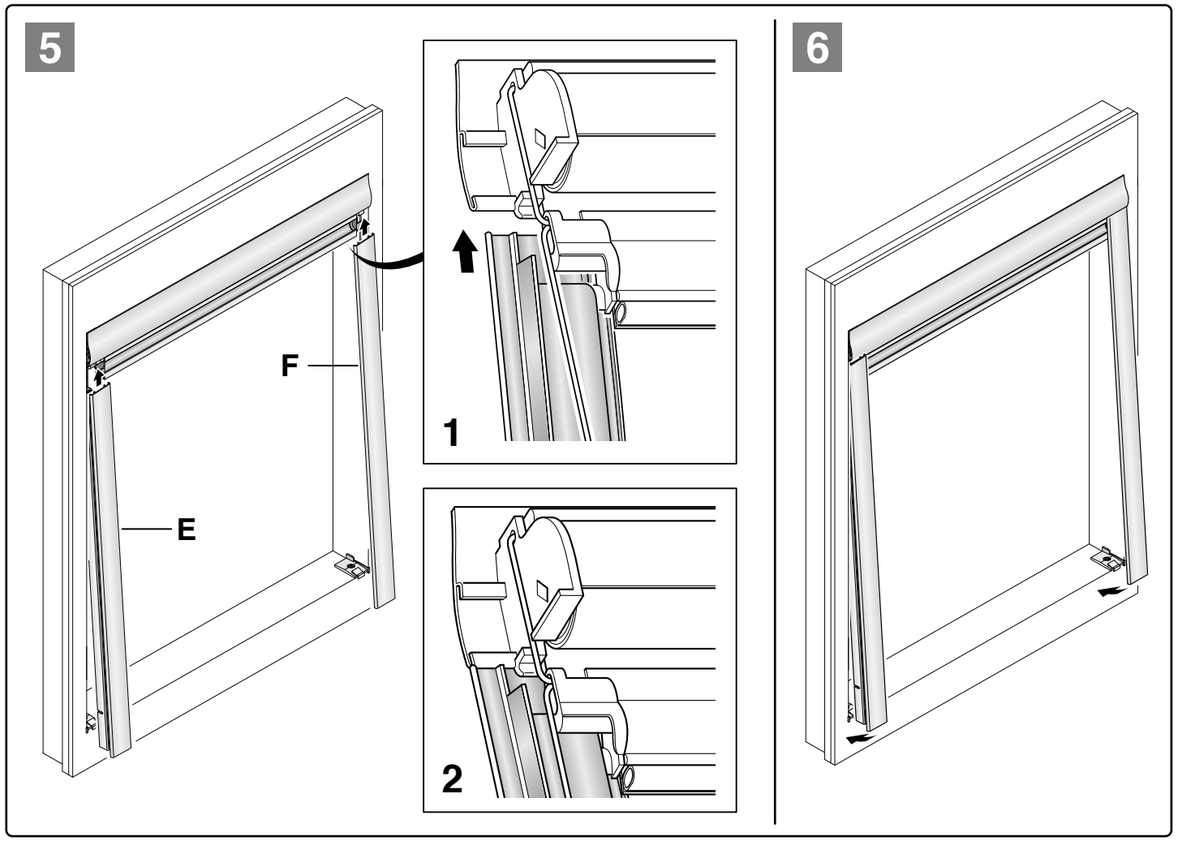
5
F
E
1
2
6

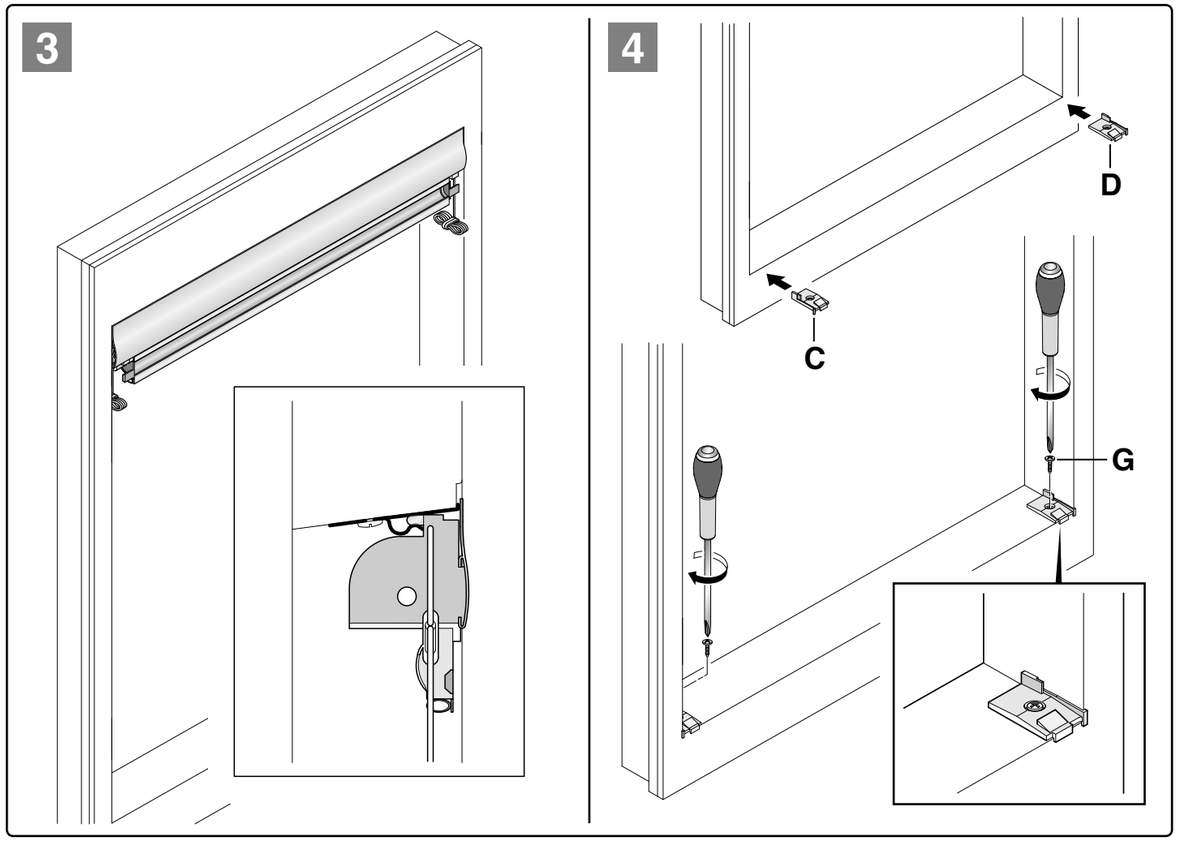
3
4
D
C
G

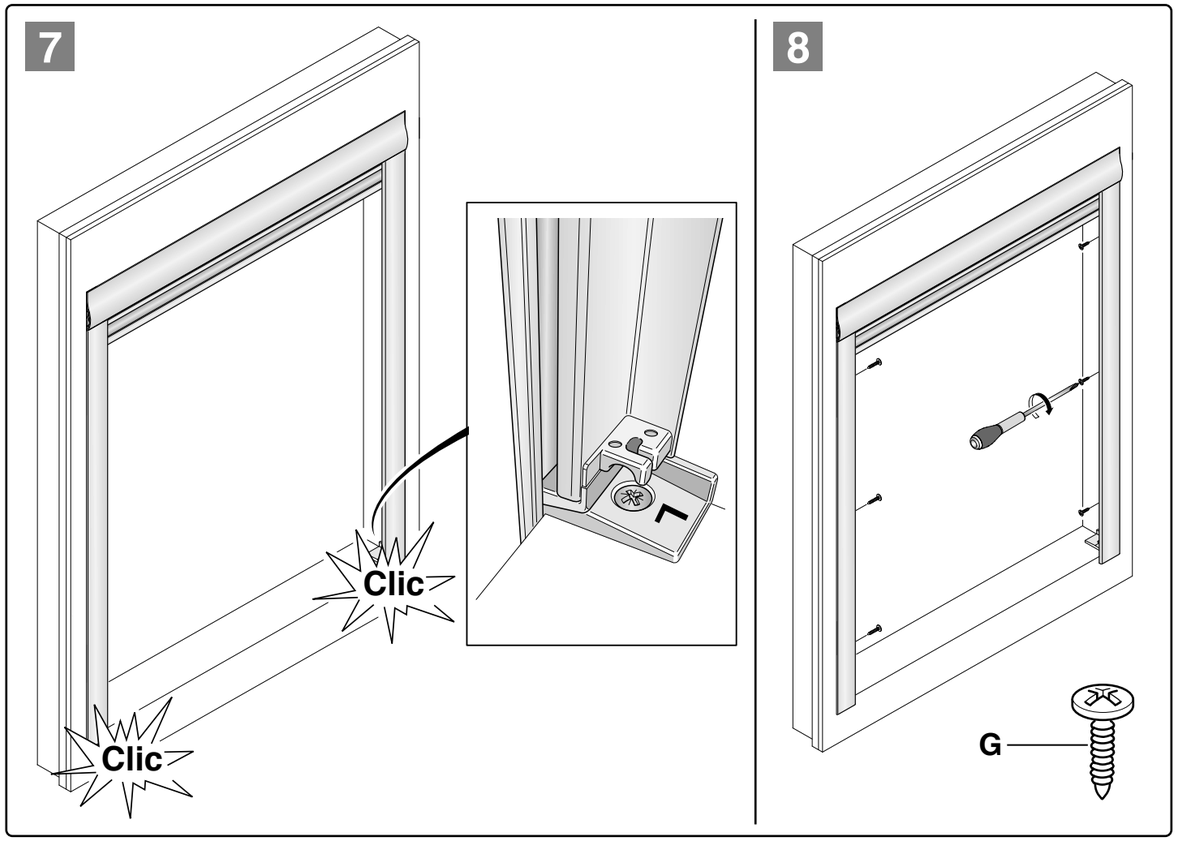
7
Clic
Clic
8
G