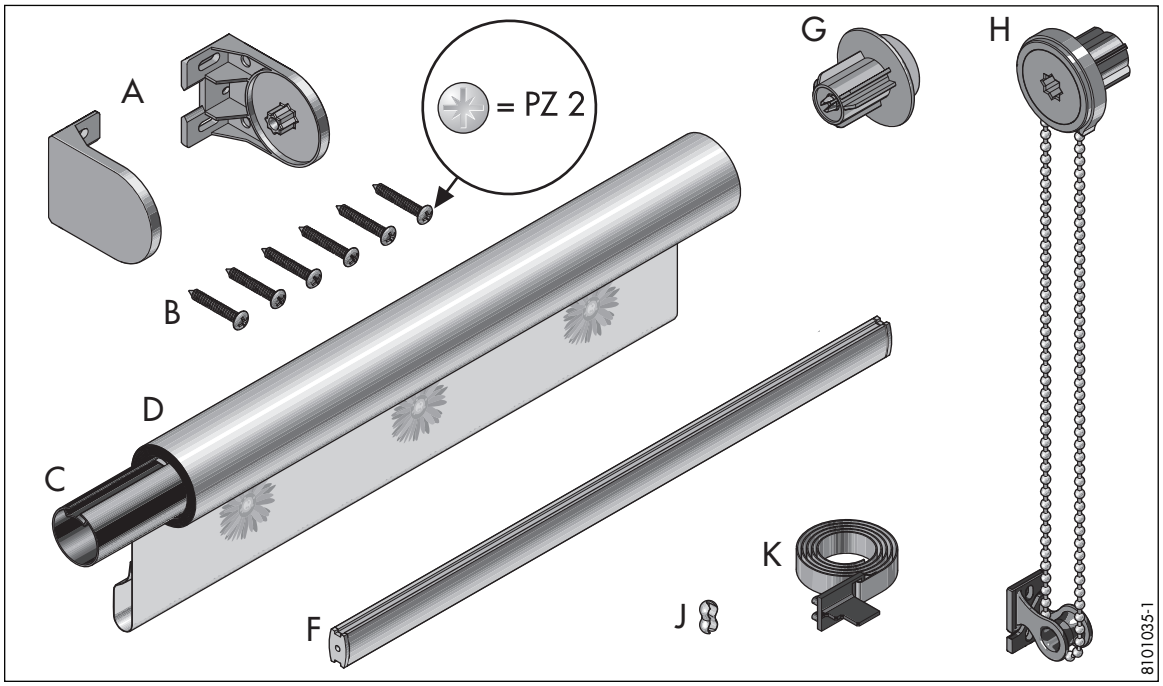
A
B
C
D
F
G
H
J
K
= PZ 2
8101035-1

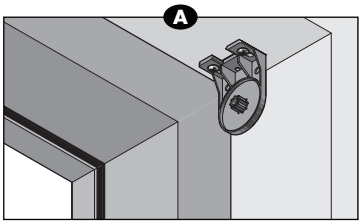
A

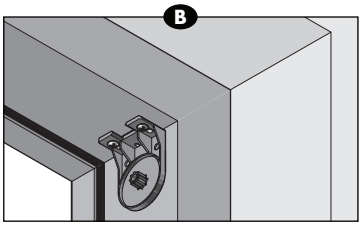
B

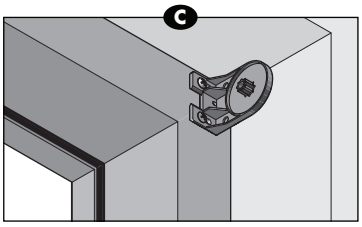
C

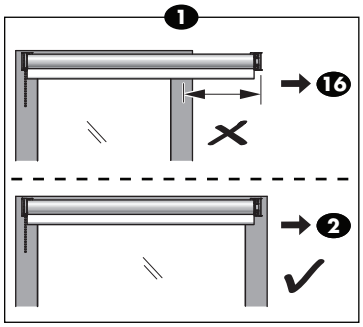
1
16
2

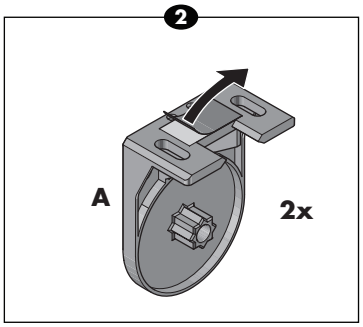
2
A
2x

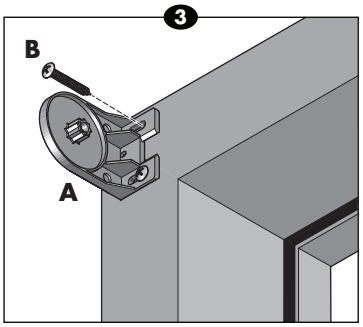
3
B
A

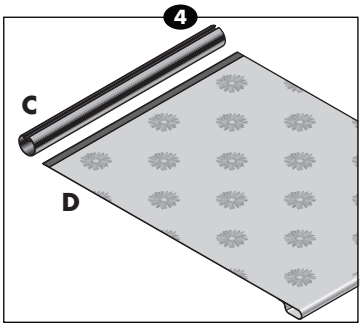
4
C
D

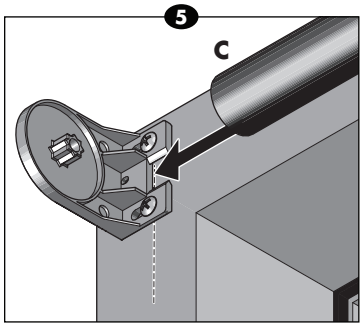
5
C

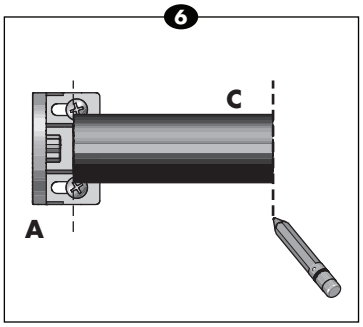
6
C
A

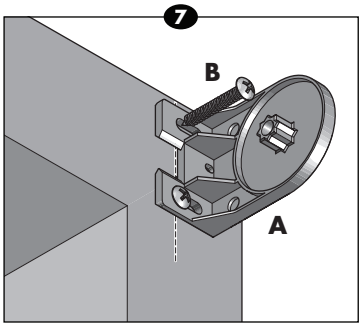
7
B
A

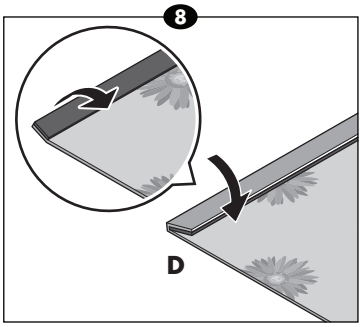
8
D

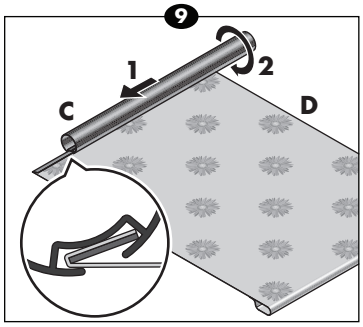
9
1
2
C
D

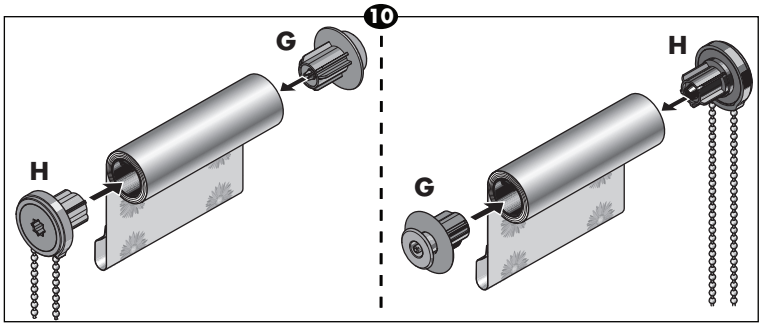
10
G
H
H
G

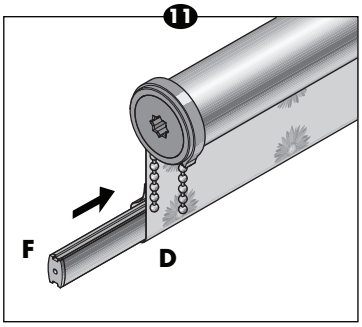
11
F
D

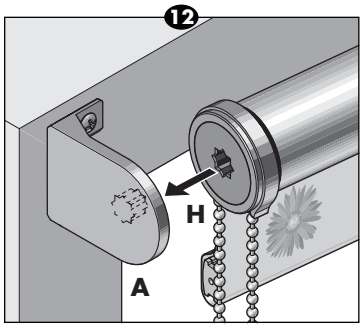
12
H
A

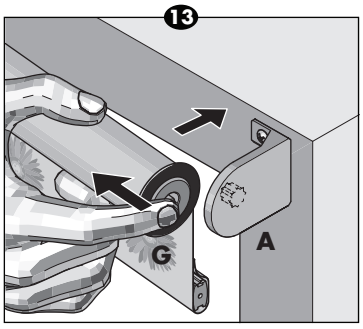
13
G
A

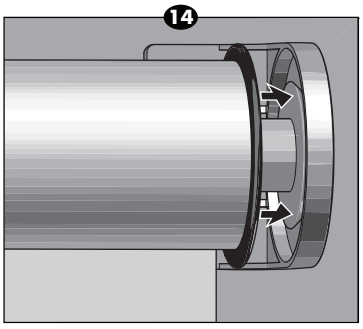
14

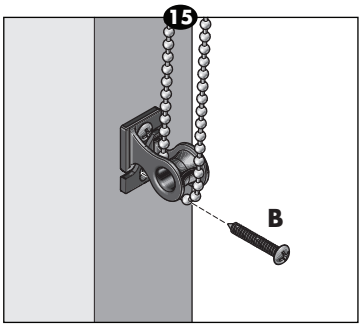
15
B

16

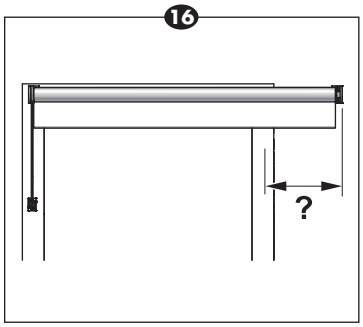

17

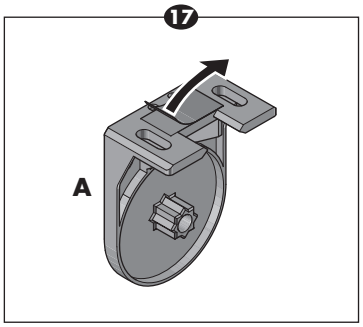

18

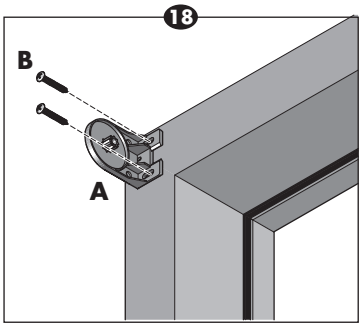

19

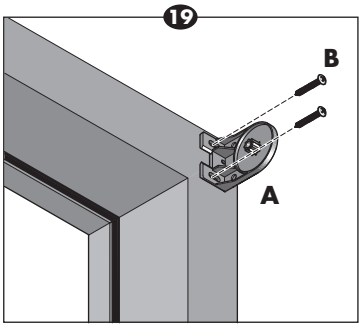

20

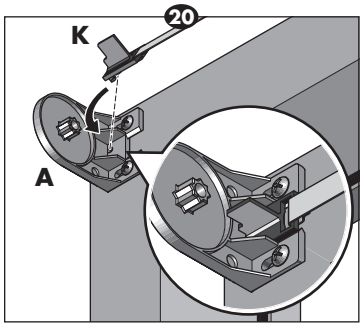

21

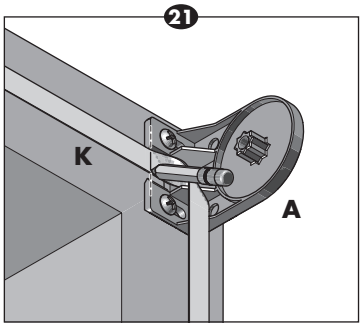

22

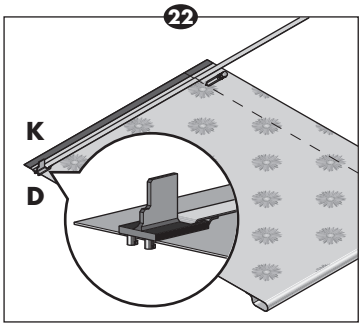

23

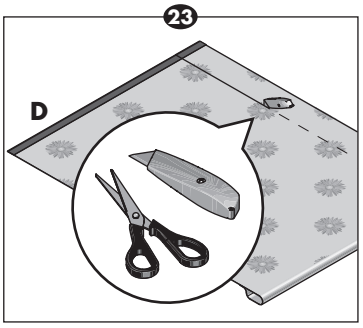

24

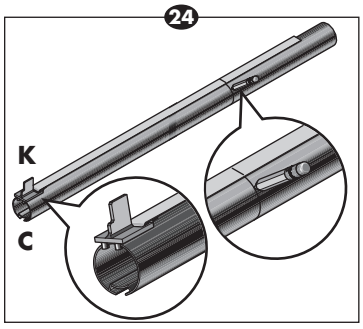

25

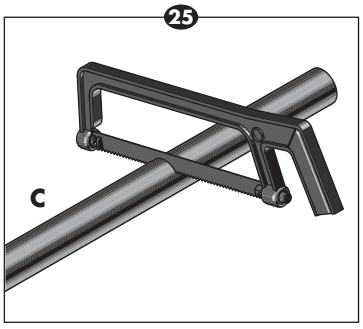

26

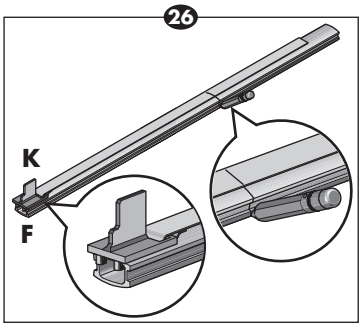

27

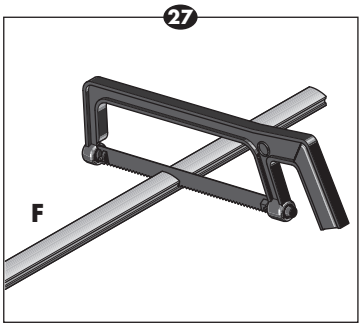

28

8

29

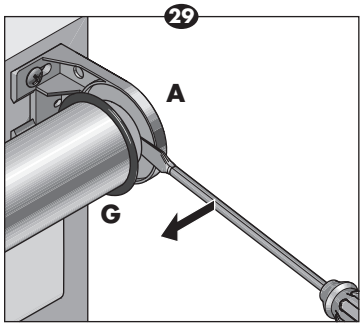

30

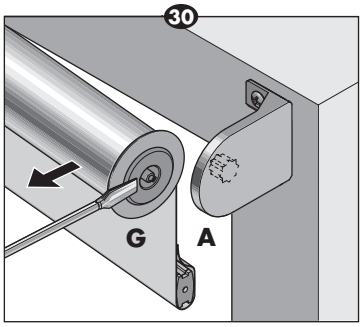

31

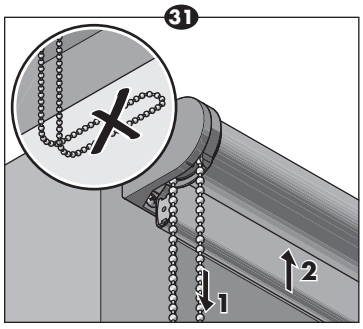

32

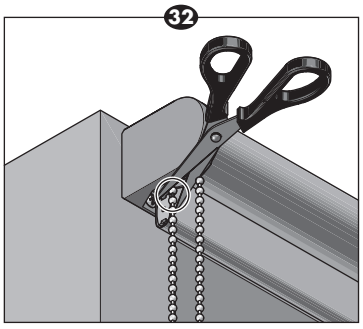

33

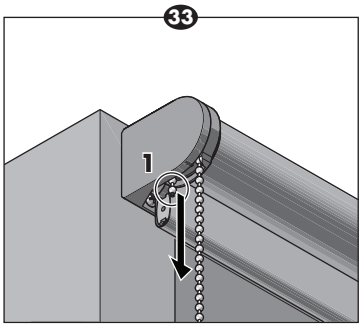
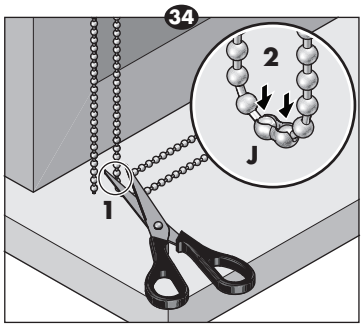
34