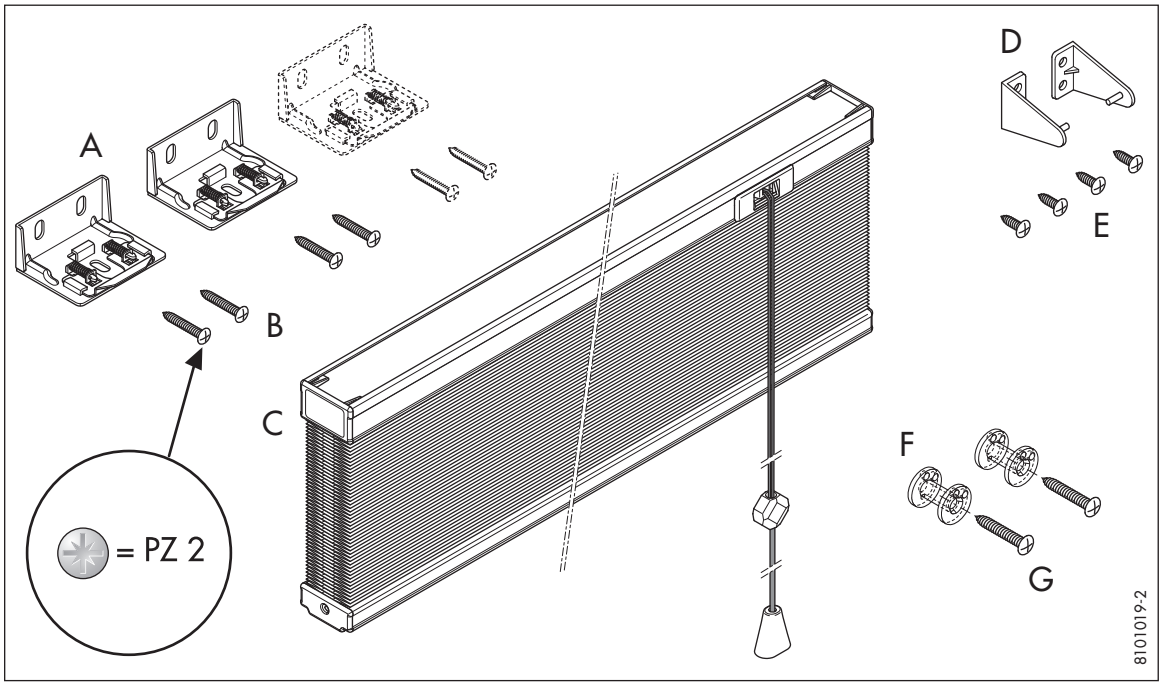
A
B
C
D
E
F
G
= PZ 2
8101019-2

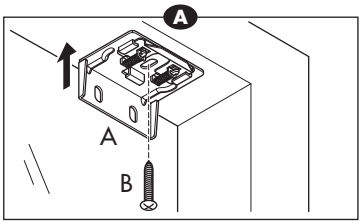
A
A
B

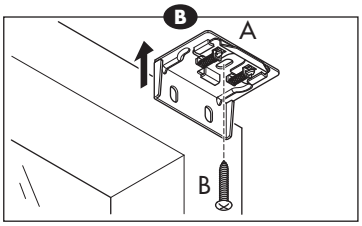
B
A
B

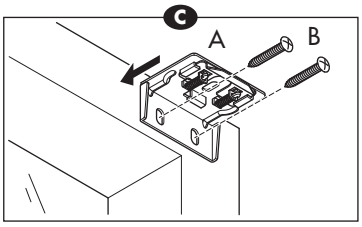
C
A
B

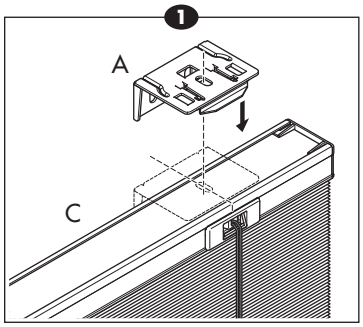
1
A
C

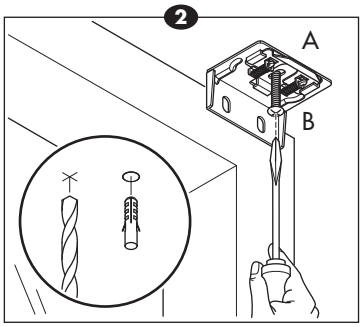
2
A
B

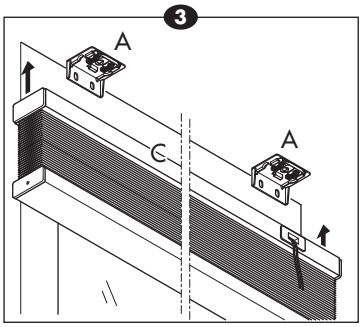
3
A
C
A

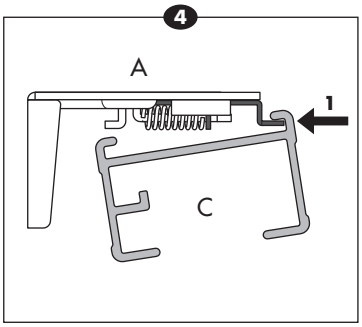
4
A
1
C

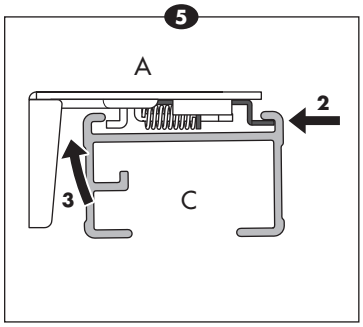
5
A
2
3
C

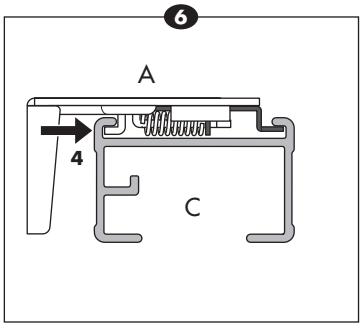
6
A
4
C

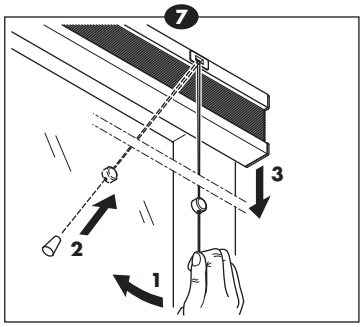
7
3
2
1

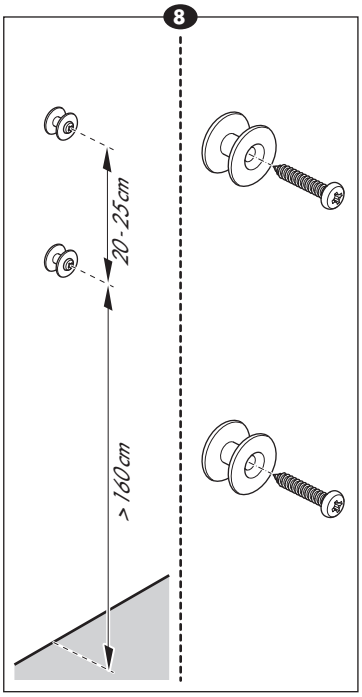
8
20-25cm
> 160cm

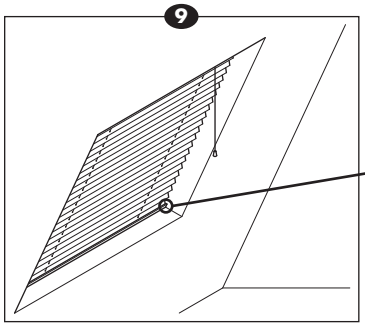
9

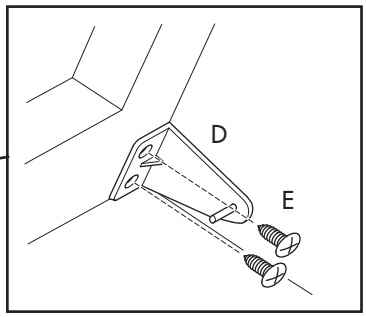
D
E

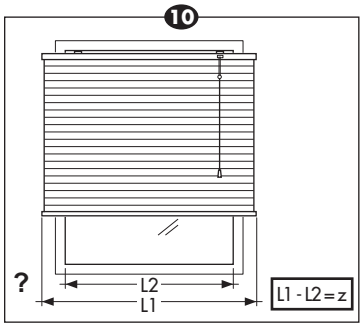
10
?
L2
L1
L1 - L2 = z

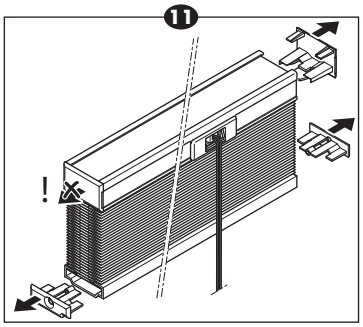
11
!

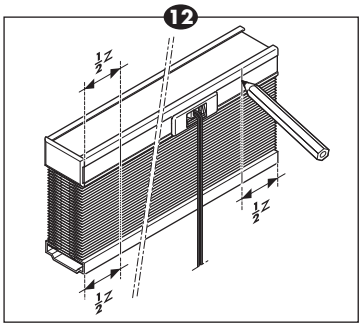
12
½z
½z
½z

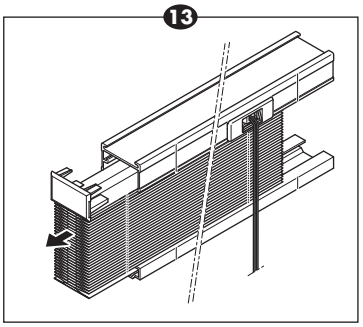
13

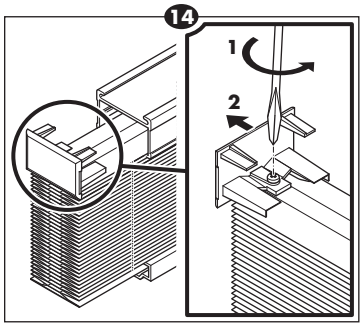
14
1
2

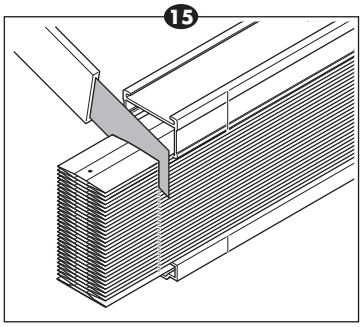
15

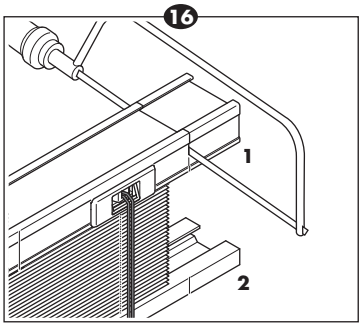
16
1
2

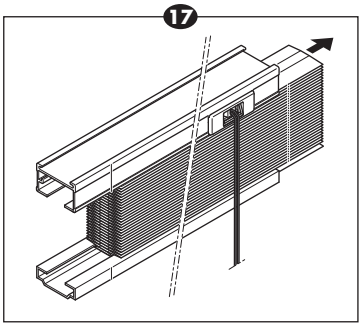
17

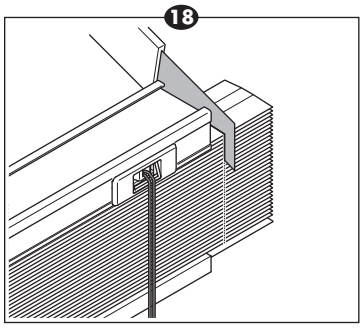
18

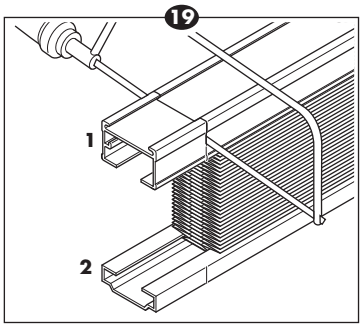
19
1
2

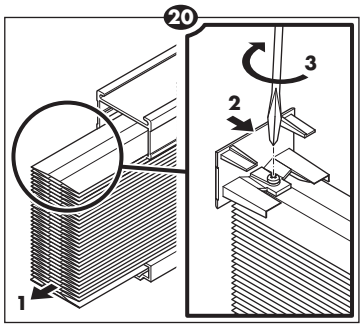
20
3
2
1

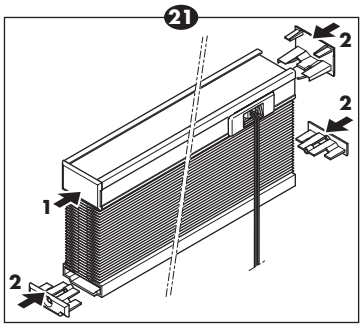
21
2
2
1
2

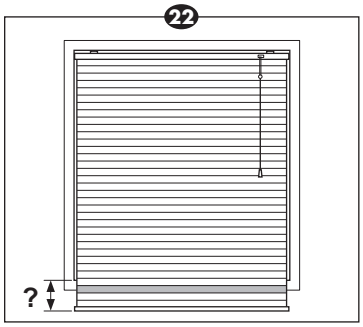
22
?

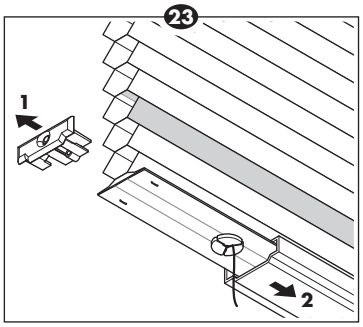
23
1
2

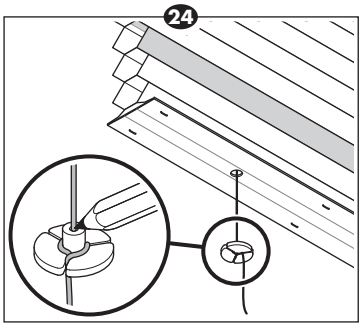
24

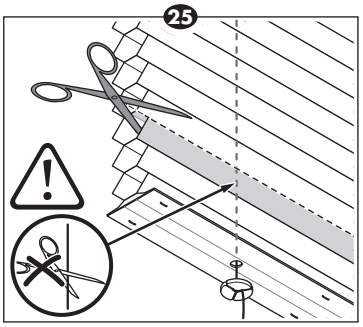
25

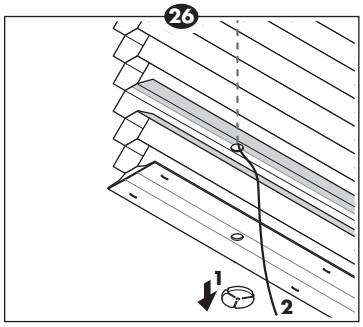
26
1
2

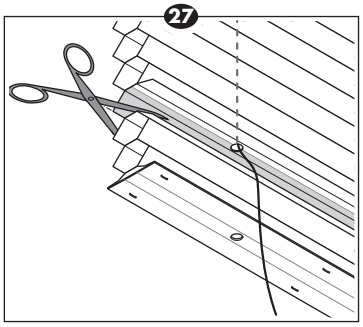
27

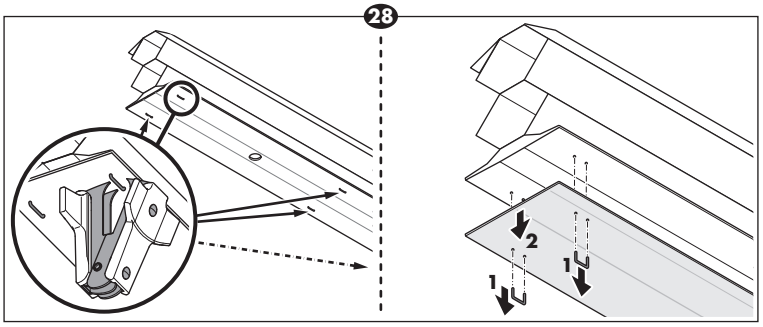
28
2
1
1

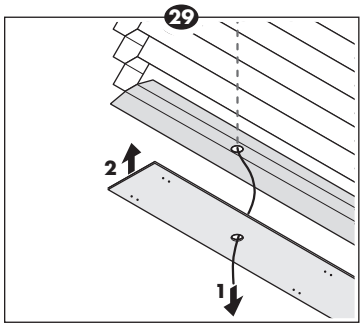
29
2
1

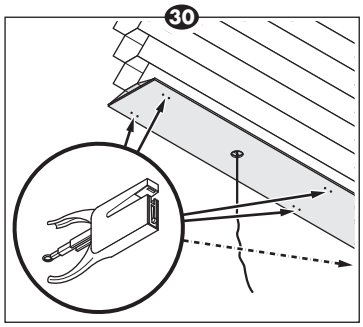
30

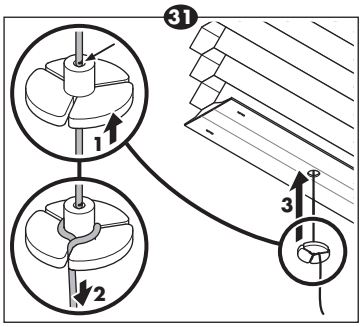
31
1
3
2

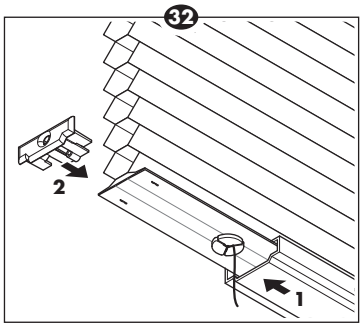
32
2
1