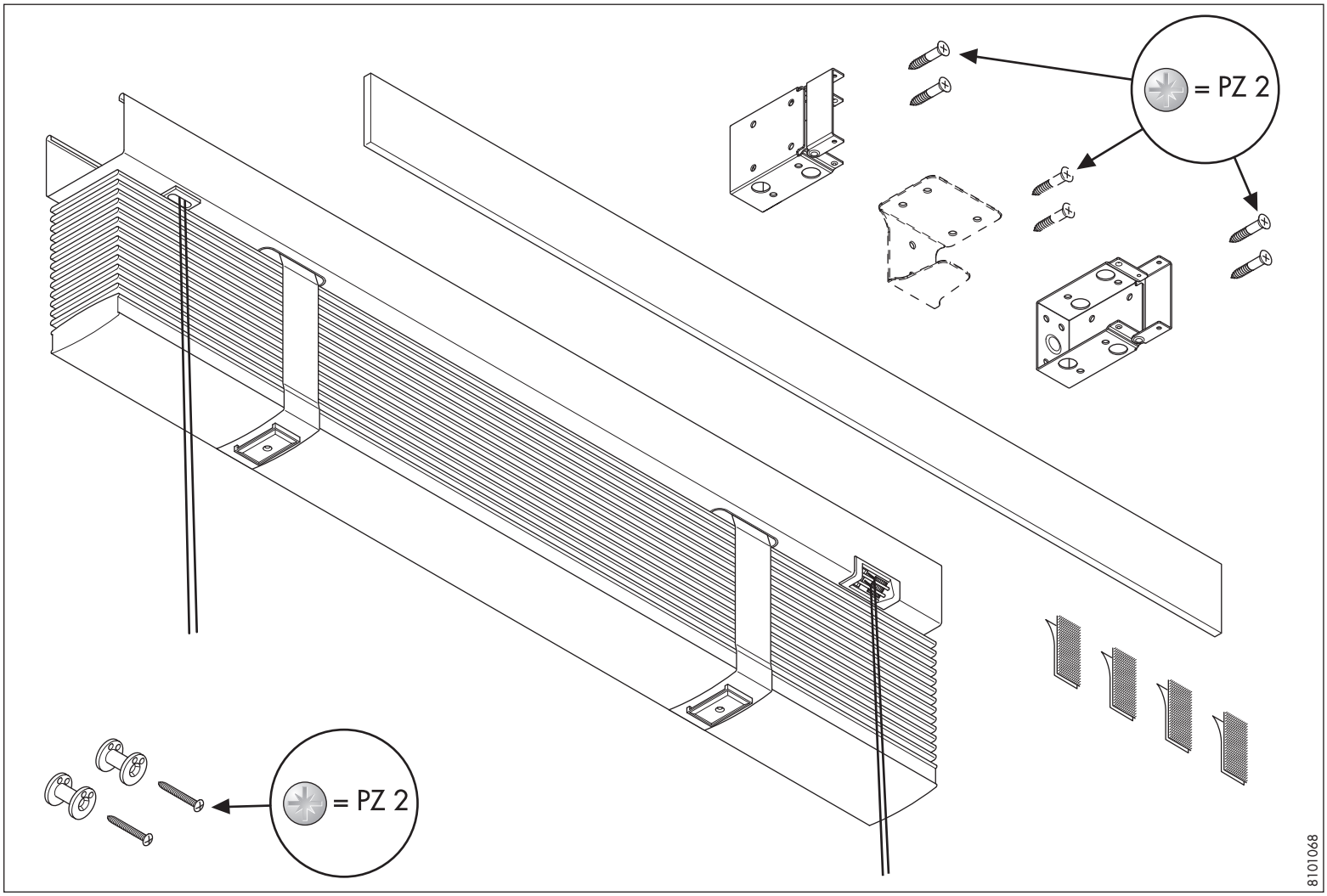
= PZ 2
= PZ 2
8101068

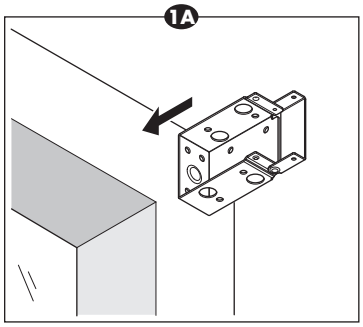
1A

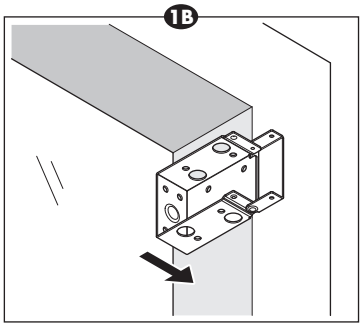
1B

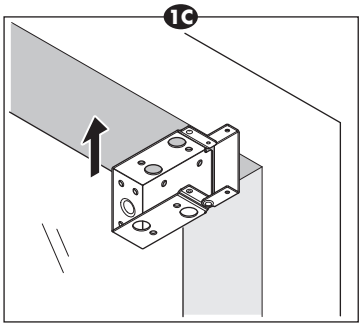
1C

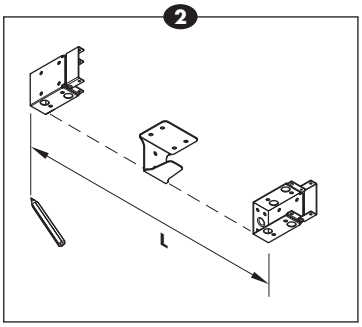
2

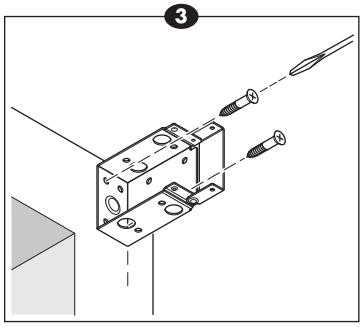
3

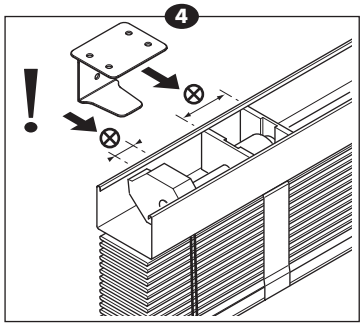
4
!

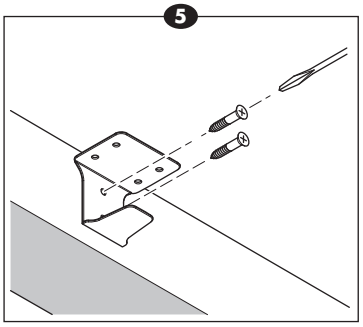
5

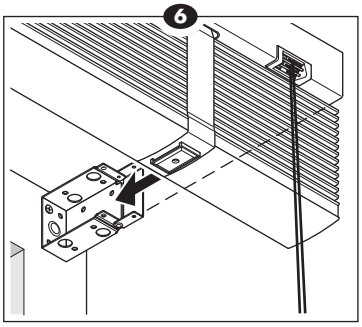
6

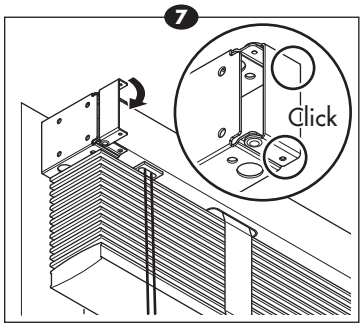
7
Click

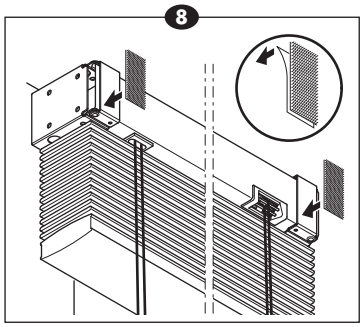
8

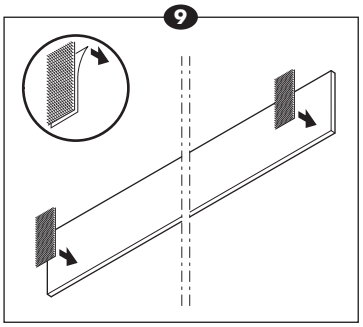
9

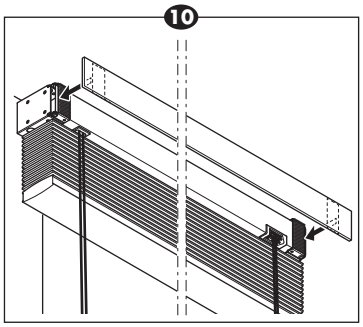
10

11

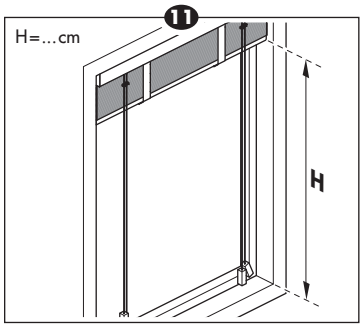

12

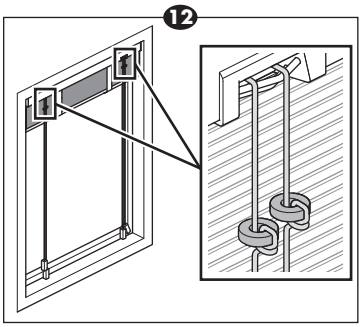

13

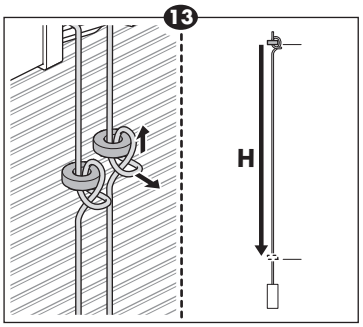

18

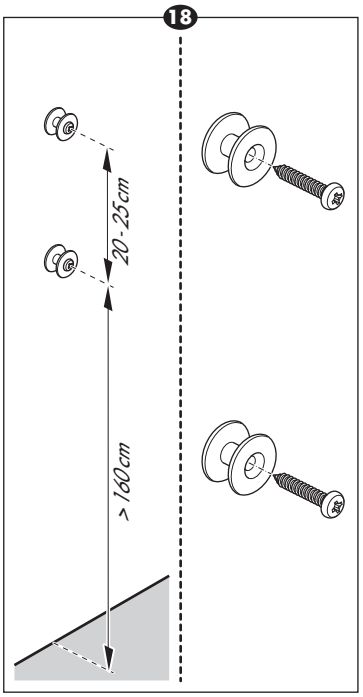

14

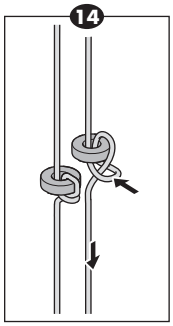

15

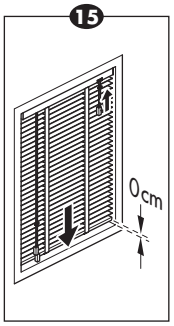

16

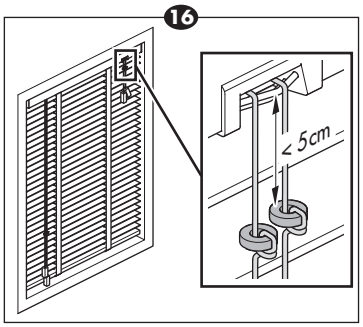

17

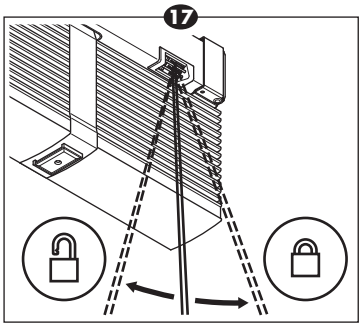

19

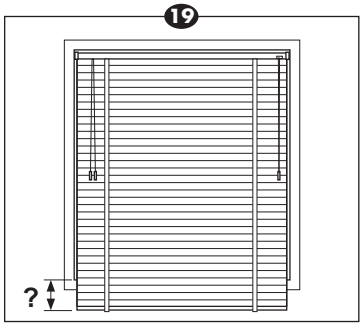

20

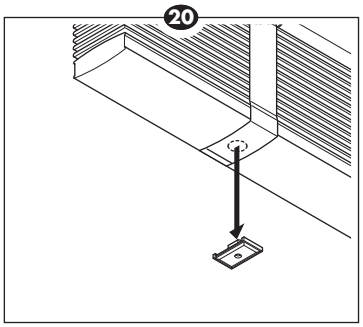

21

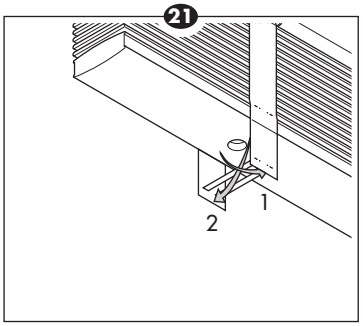

22

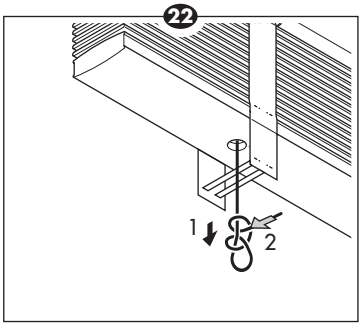

23

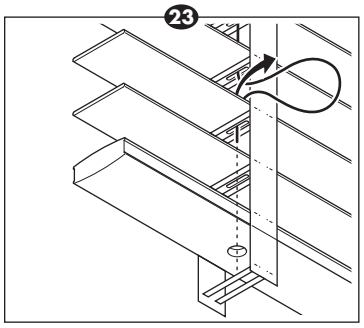

24

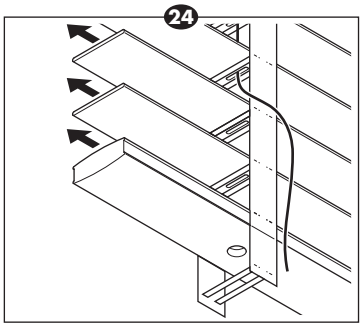

25

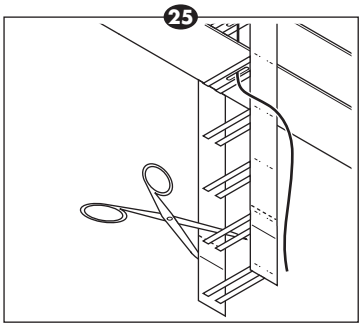

26

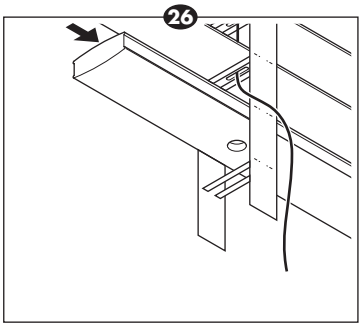

27

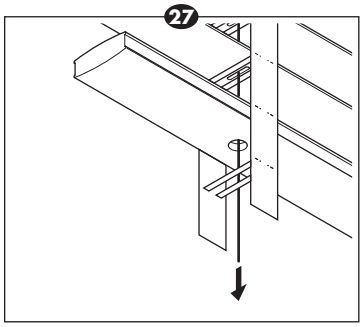

28

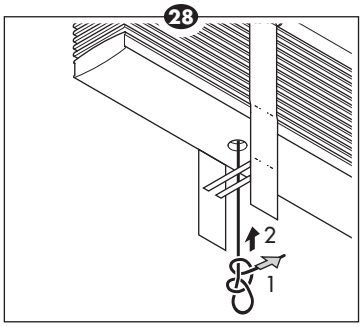

29

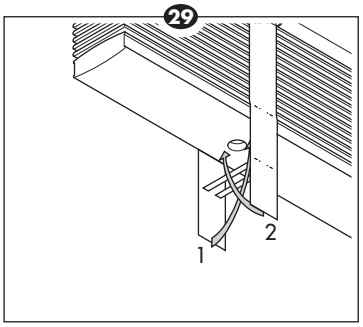
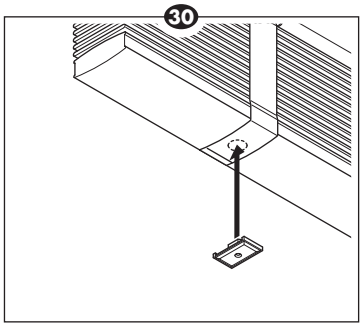
30