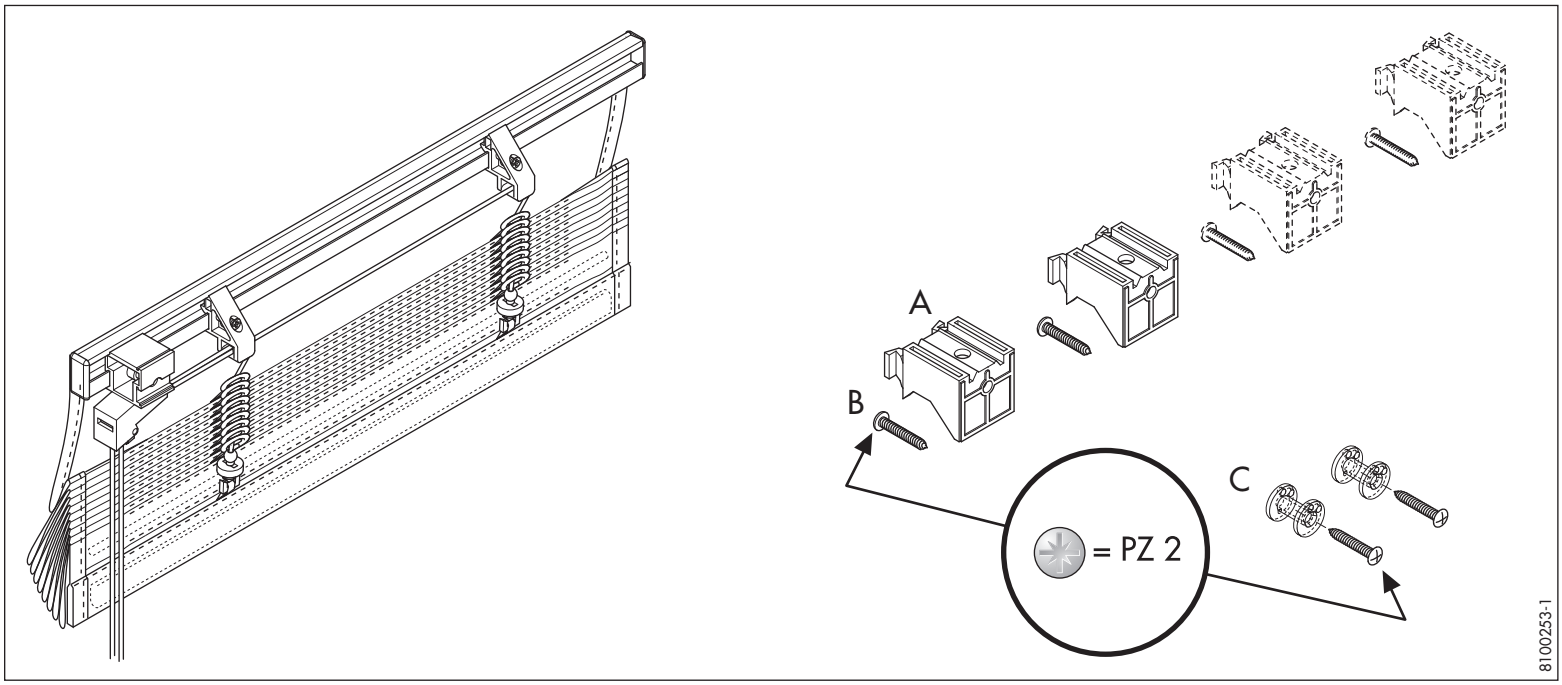
A
B
C
= PZ 2
81002253-1

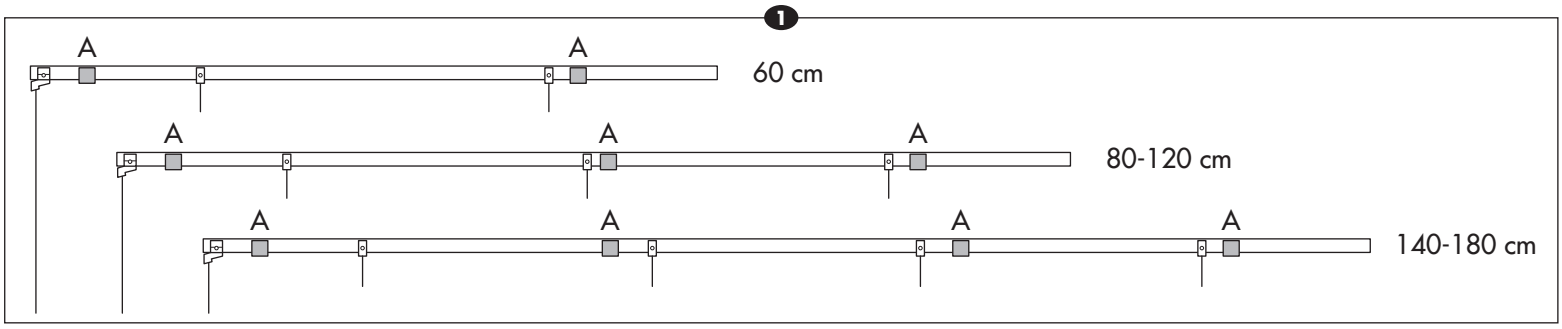
1
A
A
60 cm
A
A
A
80-120 cm
A
A
A
A
140-180 cm

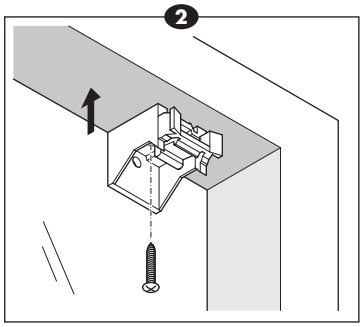
2

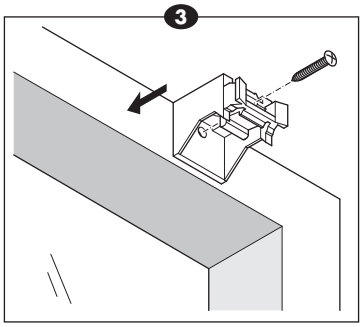
3

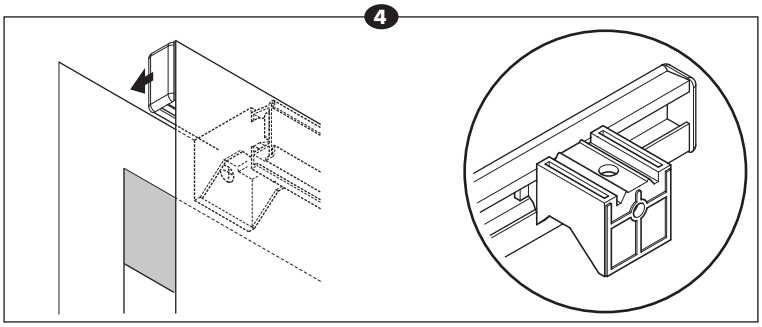
4

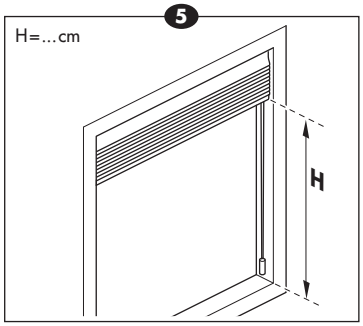
5
H=...cm
H

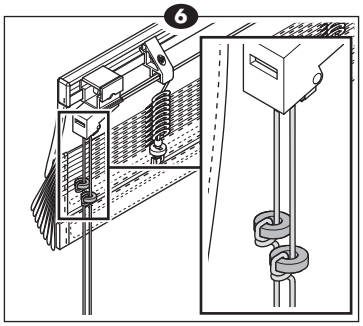
6

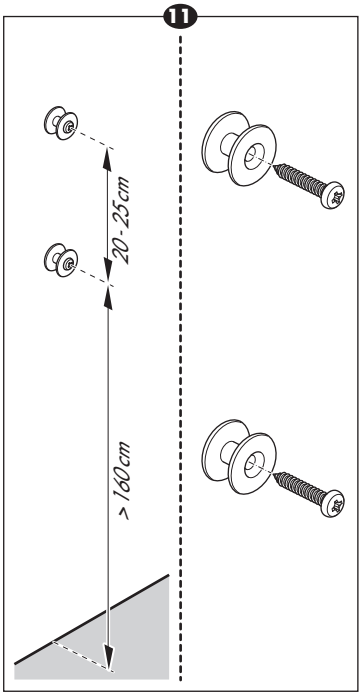
11
20 - 25cm
> 160cm

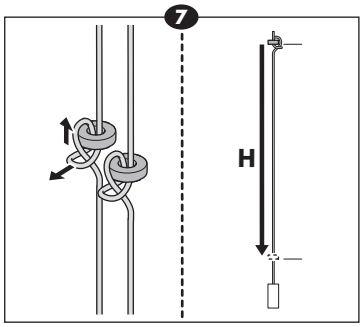
7
H

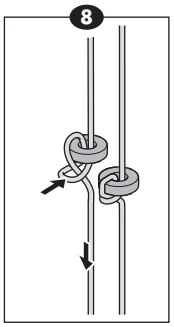
8

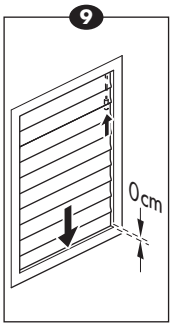
9
0cm

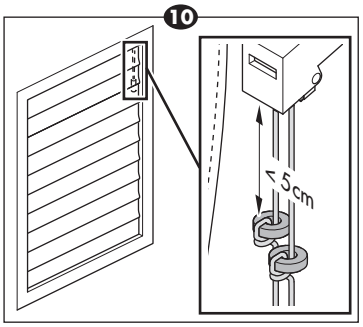
10
< 5cm