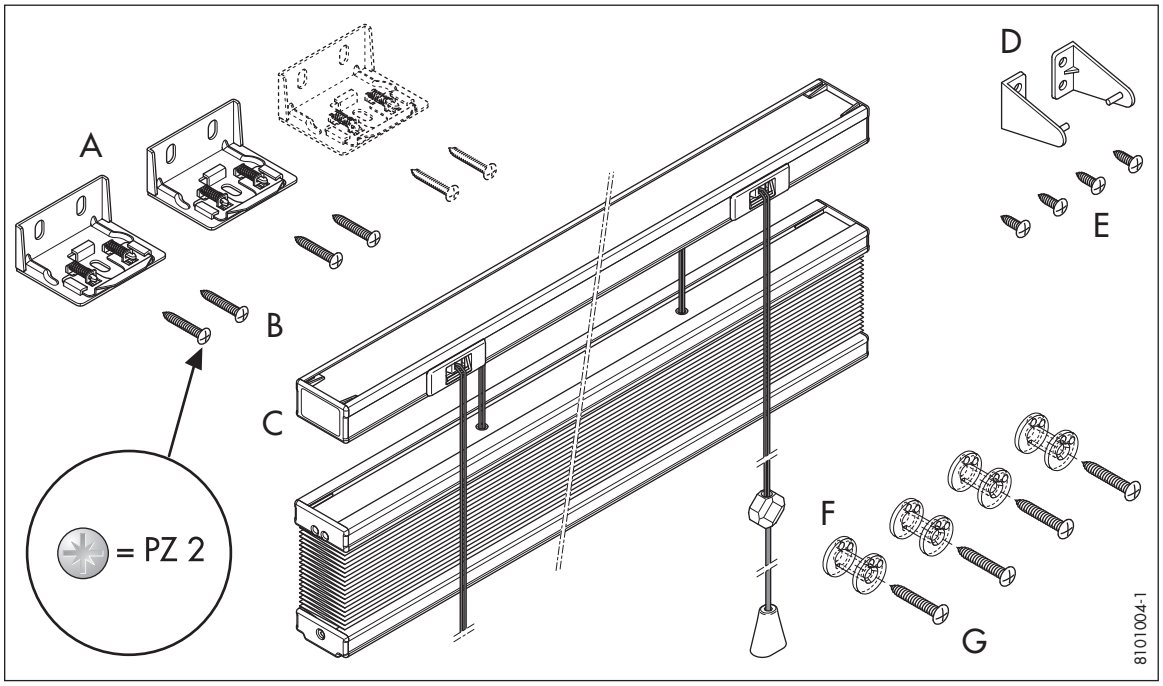
A
B
C
D
E
F
G
= PZ 2
8101004-1

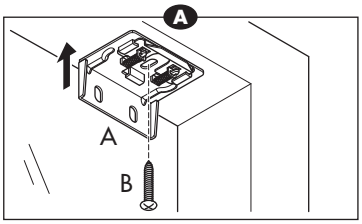
A
A
B

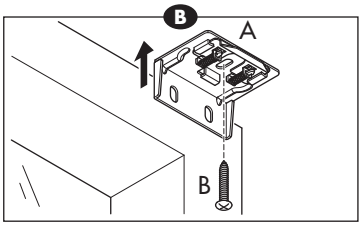
B
A
B

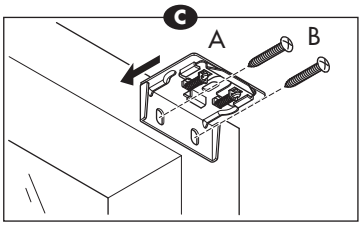
C
A
B

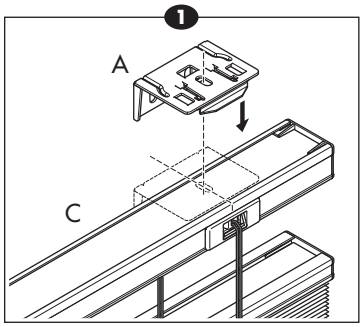
1
A
C

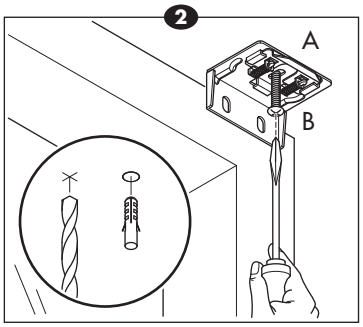
2
A
B

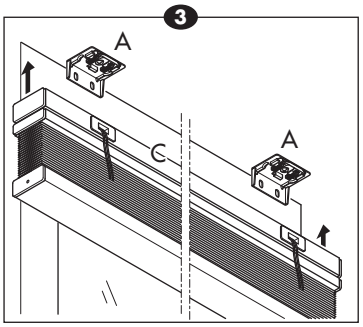
3
A
C
A

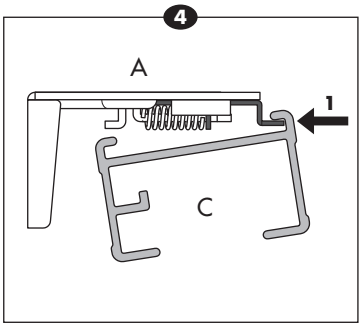
4
A
1
C

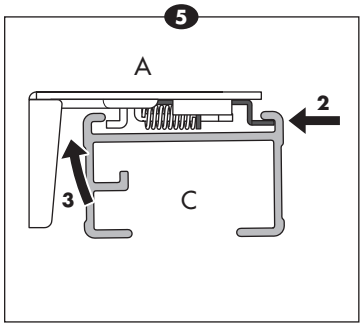
5
A
2
3
C

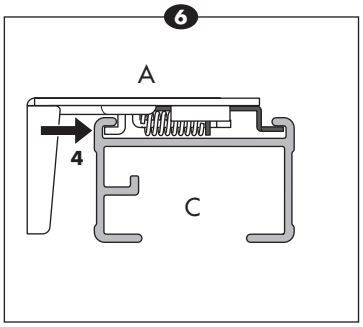
6
A
4
C

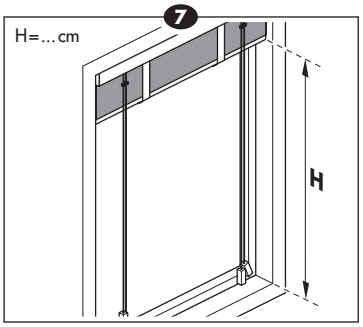
7
H=...cm
H

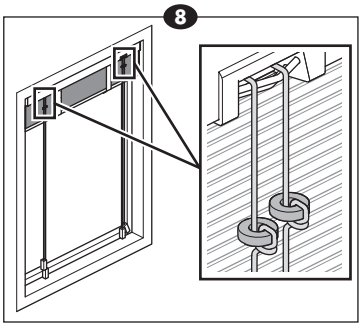
8

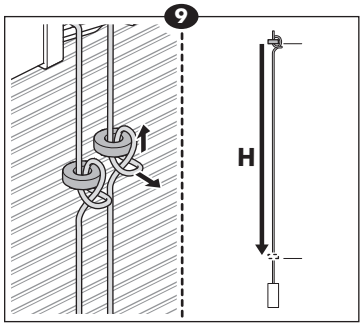
9
H

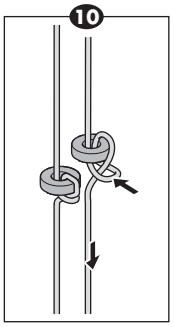
10

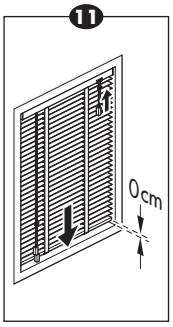
11
0cm

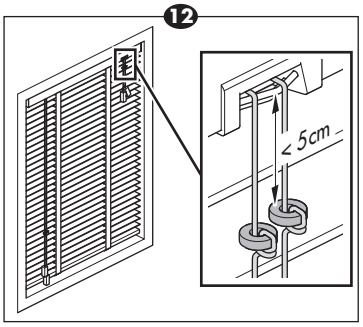
12
< 5cm

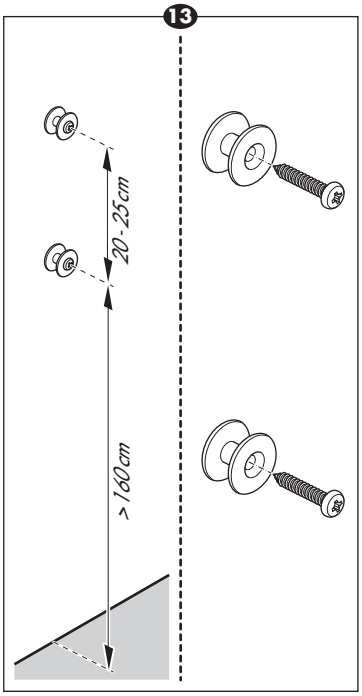
13
20 - 25cm
> 160cm

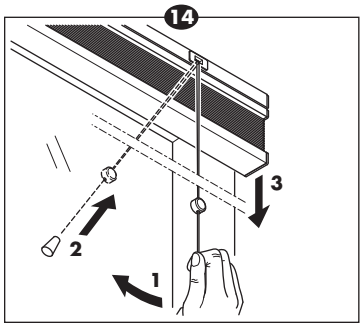
14
3
2
1

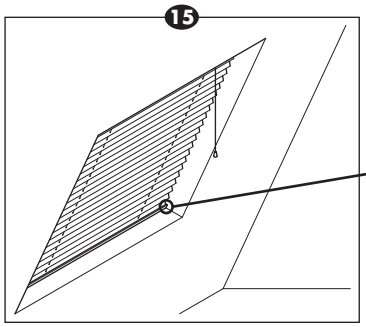
15

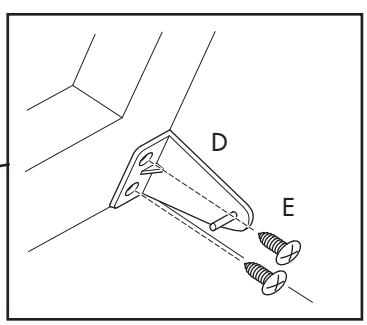
D
E

16

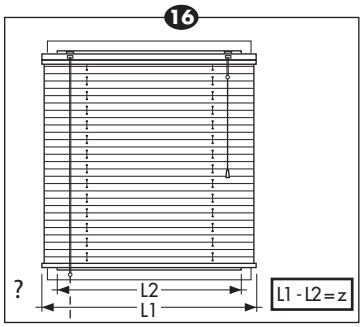

17

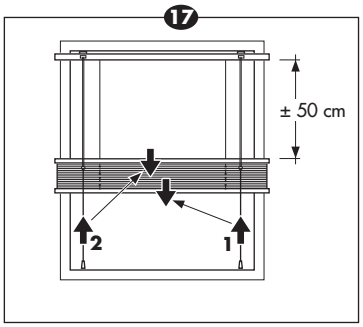

18

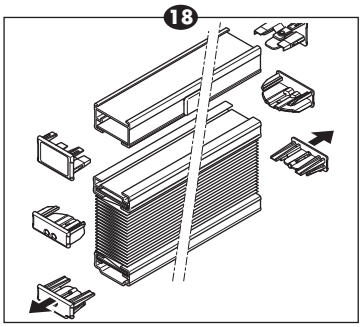

19

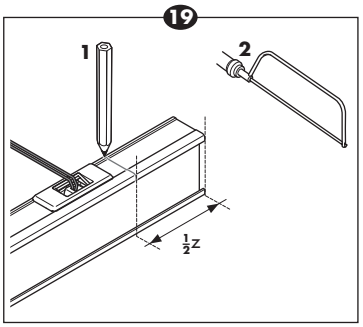

20

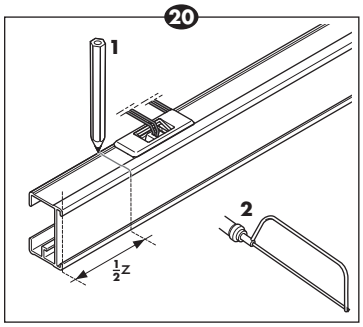

21

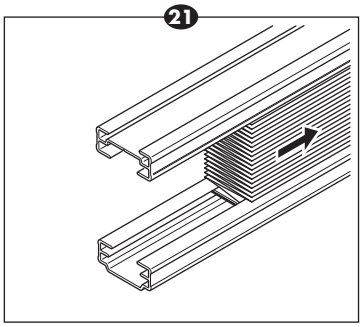

22

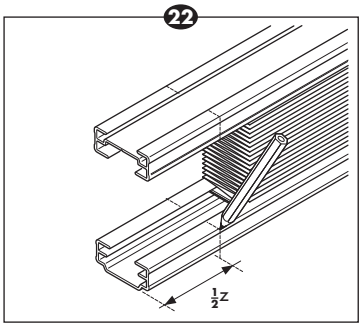

23

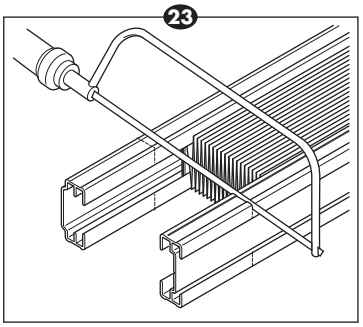

24

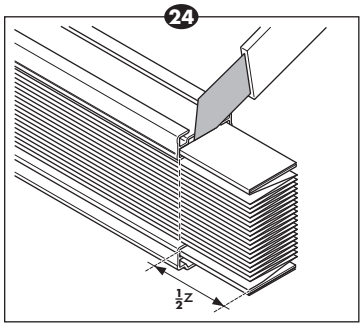

25

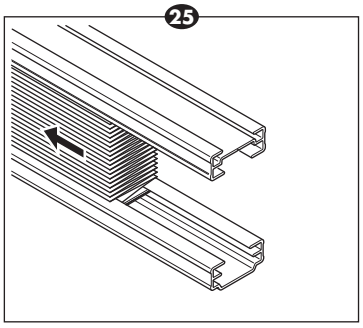

26

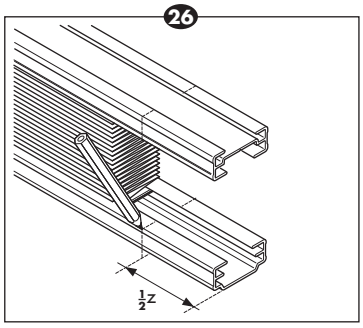

27

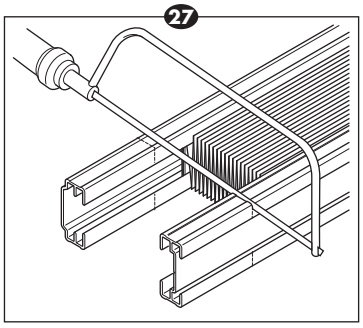

28

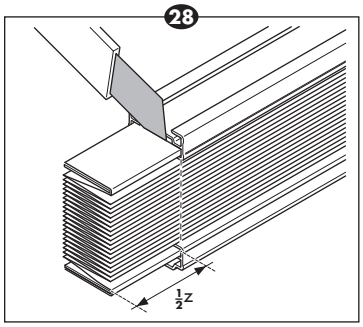

29

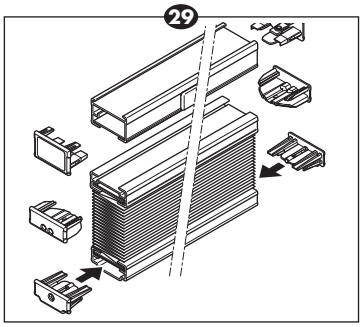

30

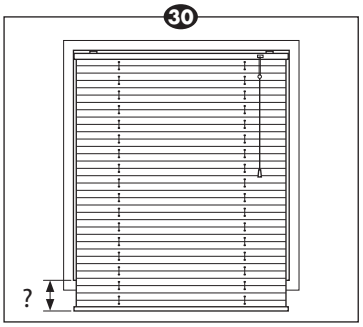

31

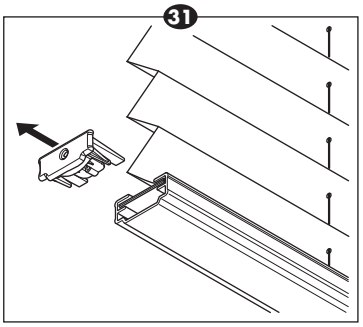

32

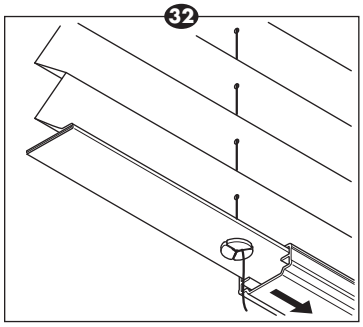

33

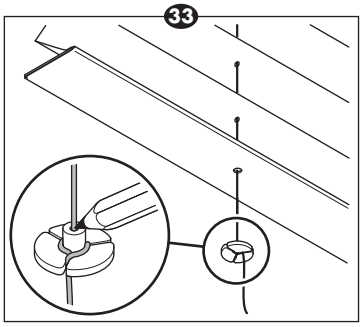

34

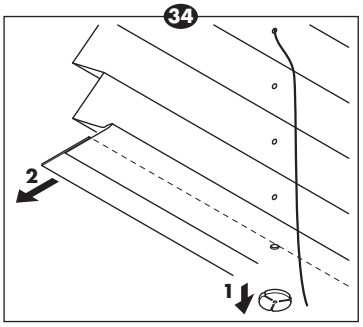

35

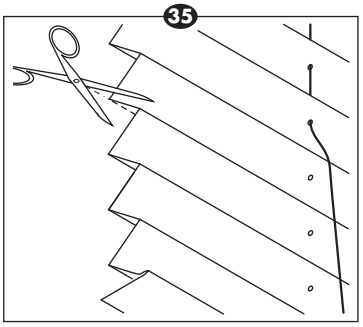

36

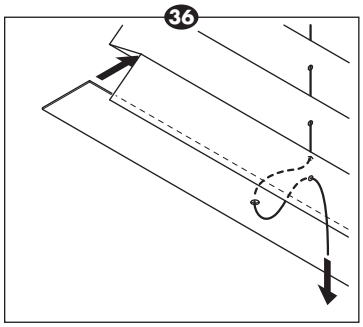

37

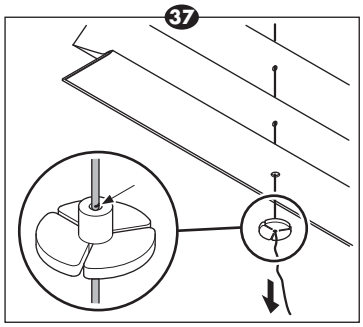

38

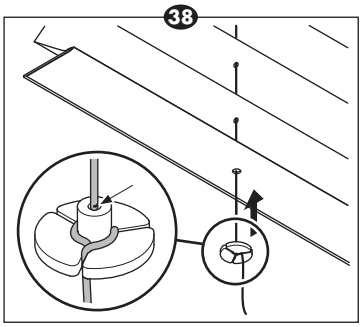
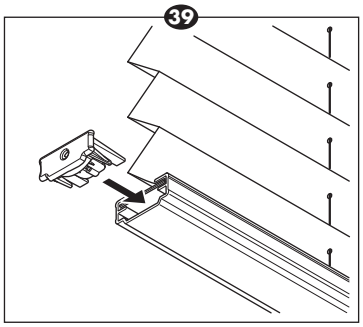
39